INDEX OF SHEETS

Sheet No.:	Sheet Description:
TS(1)	Index of Sheets, General Notes, Legend
TS(1A)1 - TS(1A)13	Interim Standard Sheets
TS(2)	Summary of Quantities
TS(2A)	Sign Panel Design
TS(2B)	Traffic Maintenance Plan
TS(3)	Traffic Signal Plan - Randolph Road & Hummel Ross Road
TS(3A)	Pole Location Sheet
TS(3B)	Pavement Marking Sheet

GENERAL NOTES - TRAFFIC SIGNALS

1. The following items and operations shall conform to the standard listed below:

   Signal Pole Foundation.....PF-8 or approved equal
   Conduit Installation.....ECI-1 or Bored
   Signal Head Hangers.....SM-3
   Sign Hanger.....SMD-2

2. Traffic signal foundation depths and above ground foundation projection/reveal (if needed) shall be determined by the Contractor in accordance with PF-8 standards after the signal pole soil test bores are completed. The pole supplier shall provide foundations designs and shop drawings that are signed sealed by a Professional Engineer. The top of all signal pole foundations shall be installed 4" above the highest point of the roadway pavement in which the mast is extending over, to allow for required signal head to pavement distances per the MUTCD.

3. Signal pole foundations may be field adjusted within the designated corners no more than 2' in any direction from the plan locations, provided that the revised foundation locations:
   - Remain out of the clear zone and pavement sections.
   - Remain within the right of way or proposed easement.
   - Does not conflict with utilities.
   - Does not limit sight distance.
   - Does not affect drainage.
   - Allow the signal heads to be adjusted with the same alignment with the designated travel lanes as shown on the plans.

4. The Contractor shall verify most arms lengths and signal head lane coverage prior to the installation of signal pole foundations.

5. All poles shall be field staked by the Contractor and inspected by the Engineer and Contractor per Section 700.04 prior to installation of foundations.

6. All unused wires in the signal heads shall be capped individually with crimp type caps.

7. All underground and overhead utilities shown on these plans are approximate only and may not be complete. At least 72 hours prior to beginning signal work, the Contractor shall contact "Miss Utility of Virginia" at 1-800-552-7001 in order to determine the extent, location, and identify all of the utilities within the work area. If the Contractor perceives a conflict between utilities and the proposed traffic signal equipment, the Contractor shall notify the Engineer immediately so that the conflict may be reviewed. the Contractor shall be responsible for repairing or replacing, at their own expense, only existing utilities, pavement, concrete items, etc. that are damaged or disturbed during construction

8. Conduit systems shall be bonded in accordance with Section 700 of the VDOT Road & Bridge Specifications. Equipment Grounding Conductor (EGC) noted in the Cable & Conduit Legend are required only if necessary to provide a bonded system.

9. Location of junction boxes are approximate and to be field reviewed by the City of Hopewell Engineer for final placement.

10. All junction boxes are to be JB-S2 unless otherwise noted on the plans. All splices in all junction boxes shall be placed on the J-Hooks.

11. Conduit locations shall be marked on all foundations per the Specifications for each conduit installed.

12. Final inspection by City personnel of the traffic signals will not be conducted until all traffic signal work is completed. Johnnie Butler (804-541-2319), shall be notified directly when the contractor is ready for the traffic signal work to be inspected.

13. This project is to be constructed in accordance with the VDOT Road and Bridge Specifications dated January 2007, Road and Bridge Standards dated 2008, Virginia Work Area Protection Manual dated 2011 and as amended by provisions and the complete paper copy of the plan assembly.

14. The signal timings will be supplied by the City of Hopewell Engineer. Any required changes to the signal timings will be the responsibility of the Contractor per Section 703.02.

15. All catalog cuts/shop drawings for equipment and material shall be submitted to the City Engineering division for review process.

16. Once the signal work is completed, final inspection of work performed and the (30) day test period has been satisfied, the City will assume maintenance.

17. Contractor shall provide documentation of the testing of the ground rods and grounding system to the City Engineer.

18. Contractor shall contact Johnnie Butler, (804) 541-2319, 72 hours prior to the commencement of construction.

19. All Signal Heads and Signal Related signs not in operation shall remain covered until such time that they are made fully operational.

20. The Traffic Signal Cabinet shall be NEMA TS-2,Type 1.

STANDARD TRAFFIC SIGNAL LEGEND

PLAN ITEM		PLAN SYMBOL PROPOSED	PLAN SYMBOL EXISTING
Metal Signal Pole & Foundation and Mast Arm (As noted in Signal Pole Legend)			
Pedestal Pole and Foundation (Std.PF-2)			
Pedestal Pole and Foundation (Std.PA-3)			
Traffic Signal Head	w/ Backplate		
	w/o Backplate		
Pedestrian Signal Head			
Pedestrian Pushbutton & Sign		P.B.	P.B.
Traffic Signal Sign	Mast Arm or Span Wire Mt'd.		
	Pole Mounted		E
Emergency Vehicle Pre-emption (EVP) Sensor			
	w/ Conf.Light		
	w/o Conf.Light		
Video Detection Camera			
Junction Box (Std.as noted on plans)		J	J
Signal Luminaire (250 W) and Arm			
Signal Luminaire (400 W) and Arm			
Loop Detector (Size as noted on plans)		6' x 20'	6' x 20'
Video Detection Zone (Size as noted on plans)		VDZ 6' x 20'	VDZ 6' x 20'
Conduit			

PLAN ITEM		PLAN SYMBOL PROPOSED	PLAN SYMBOL EXISTING
Electrical Service Meter		SM	SM
Electrical Service Safety Switch (Disconnect)		SD	SD
Controller Cabinet	Ground Mounted		
	Pole Mounted		
Master Controller Cabinet	Ground Mounted	MC	MC
	Pole Mounted	MC	MC
Controller Cabinet & Foundation	Std.CF-1	C 1	C 1
	Std.CF-3	C 3	C 3
	Std.CF-4	C 4	C 4
Master Controller Cabinet & Foundation	Std.CF-1	MC 1	MC 1
	Std.CF-3	MC 3	MC 3
	Std.CF-4	MC 4	MC 4
Uninterruptible Power Supply Cabinet			SSM

LABELS

Signal Pole or Controller	A	Proposed Signal Head	2	Signal Phasing	Ø2	Sign	S-1
Cable and Conduit	A	Existing Signal Head	2	Pedestrian Phasing	P2	Video Detection Camera	VDC-1
Junction Box	S3	Proposed Pedestrian Signal Head	P2			Emergency Preemption Detector	EVP-1
		Existing Pedestrian Signal Head	P2				

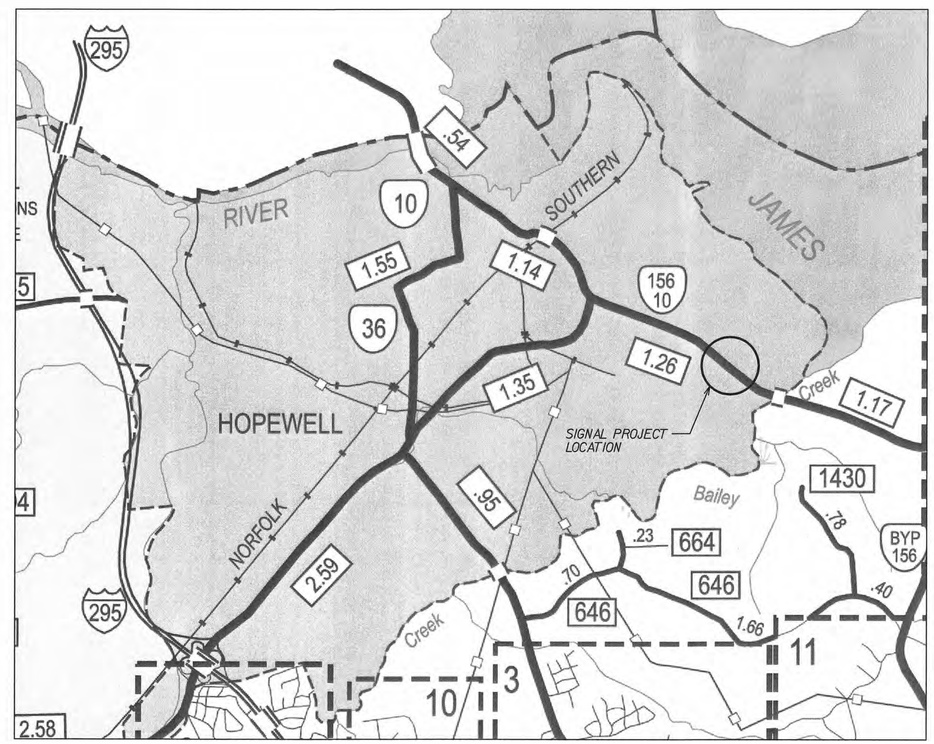

TRAFFIC CONTROL DEVICE PLANS

TRAFFIC SIGNAL PLAN

RTE. 10 (RANDOLPH ROAD) & HUMMEL ROSS ROAD

CITY OF HOPEWELL, VIRGINIA

COMMONWEALTH OF VIRGINIA
JEFFREY PHILLIP MOCHANADEL
Lic. No. 052202
02/05/16
PROFESSIONAL ENGINEER

THIS DRAWING PREPARED AT THE COMPANY OFFICE AT:
1001 Boulders Parkway | Richmond, VA 23225
TEL 804.200.6500 fax 804.560.1016 www.timmons.com

YOUR VISION ACHIEVED THROUGH OURS.

Site Development | Residential | Infrastructure | Technology

DATE	REVISION DESCRIPTION

TIMMONS GROUP

DATE	02/05/16
DRAWN BY	GTS
DESIGNED BY	GTS
CHECKED BY	JPH
SCALE	N/A

EVONIK INDUSTRIES
RICHMOND DISTRICT - CITY OF HOPEWELL, VIRGINIA
TRAFFIC SIGNAL GENERAL NOTES

JOB NO. 37371

SHEET NO. TS(1)

These plans and associated documents are the exclusive property of TIMMONS GROUP and may not be reproduced in whole or in part and shall not be used for any purpose whatsoever, inclusive, but not limited to construction, bidding, and/or construction staking without the express written consent of TIMMONS GROUP.

TOP VIEW

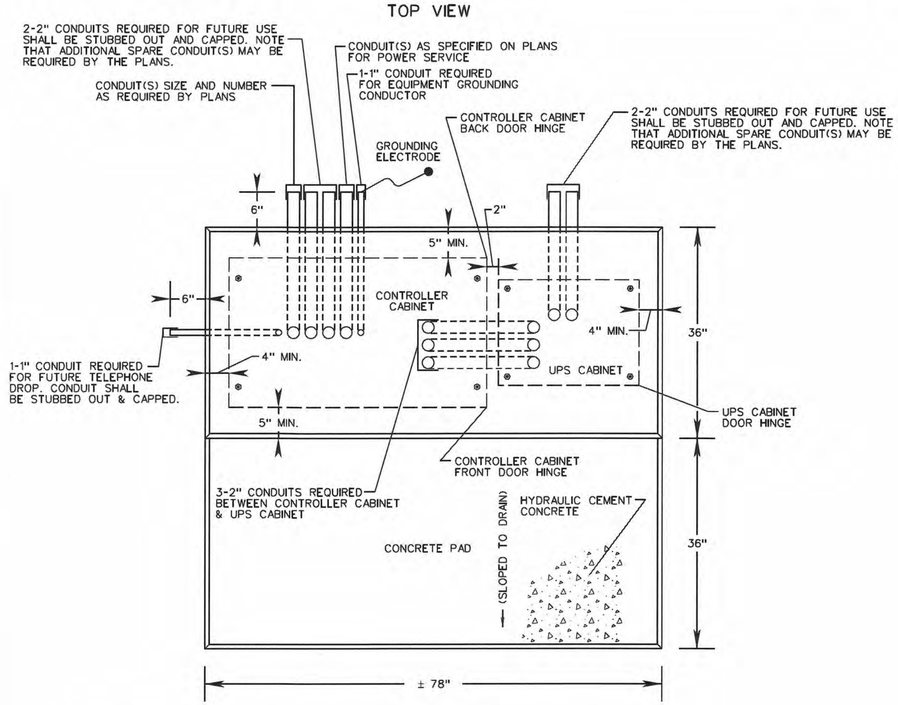

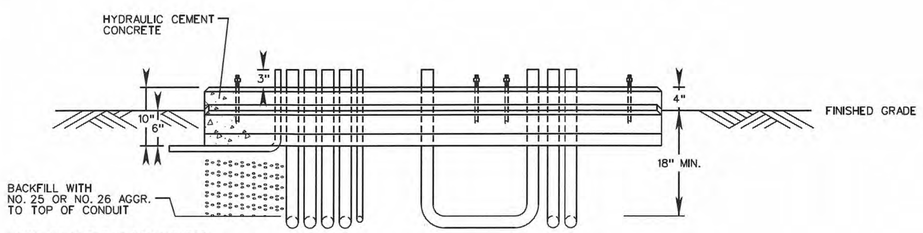

NOTE: ONLY THE 1" CONDUIT FOR TELEPHONE DROP SHALL BE INSTALLED 6" BELOW FINISHED GRADE. ALL OTHER CONDUITS SHALL BE INSTALLED A MINIMUM OF 18" BELOW FINISHED GRADE.

FRONT VIEW

SIDE VIEW

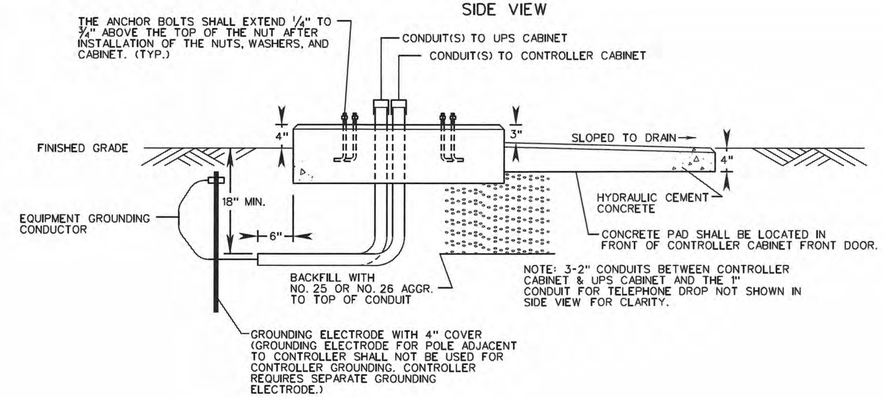

NOTES:

1. ALL EXPOSED CONCRETE SURFACE EDGES SHALL BE CHAMFERED 3/4".

2. ANCHOR BOLTS AND BOLT TEMPLATES SHALL BE FURNISHED BY THE CABINET MANUFACTURER WITH BOTH CABINETS.

3. EACH CABINET SHALL HAVE FOUR 1/2" DIA. X 8" LONG WITH 1 1/2" L-BEND ANCHOR BOLTS.

4. THE CONTROLLER CABINET AND UPS CABINET SHALL BE CENTERED FROM FRONT TO BACK ON THE FOUNDATION. THE TOTAL WIDTH OF THE CONTROLLER CABINET AND UPS CABINET SHALL BE CENTERED FROM SIDE TO SIDE ON THE FOUNDATION.

5. EACH FOUNDATION SHALL BE PERMANENTLY MARKED TO INDICATE ALL SIDES FROM WHICH CONDUITS PASS. THIS MARK SHALL BE MADE WITH A TROWEL WHEN FINISHING THE CONCRETE AND SHALL BE 1/4" DEEP AND 4" TO 6" LONG. LOCATIONS OF EMPTY CONDUITS SHALL HAVE AN ADDITIONAL 2" LONG MARK MADE PERPENDICULAR TO AND CENTERED ON THIS MARKING.

6. THE CONTROLLER CABINET AND UPS CABINET SHALL BE SEALED WITH A SILICONE SEALANT AT THE INSIDE AND OUTSIDE FOUNDATION JOINTS.

7. BELL ENDS SHALL BE INSTALLED ON EACH END OF PVC CONDUITS.

8. EMPTY CONDUITS SHALL BE PLUGGED TO PREVENT MOISTURE AND RODENT ENTRY.

9. GROUNDING BUSHINGS SHALL BE INSTALLED ON EACH END OF METAL CONDUITS.

10. FOUR 1/2" DIAMETER WEEPHOLES SHALL BE INSTALLED IN THE FOUNDATION. TWO HOLES SHALL BE INSTALLED FOR EACH CABINET AND LOCATED 2" INSIDE OF THE BACK OR SIDE EDGES OF THE CABINET. WEEPHOLES SHALL BE SLOPED TO ALLOW OUTLET TO BE 3" BELOW TOP OF THE FOUNDATION. TWO INCHES OF THE OUTLET END SHALL BE FIBER FILLED.

11. OPEN ENDS OF CONDUIT WITH CONDUCTOR CABLES INSTALLED SHALL BE SEALED WITH AN APPROVED SOFT PLIABLE AND EASILY REMOVABLE, WATERPROOF SEALANT. THE SEALANT SHALL NOT HAVE A DELETERIOUS EFFECT ON CABLE COVERINGS.

12. IN ADDITION TO ELECTRICAL SERVICE GROUNDING ELECTRODE SYSTEM, THE CONTROLLER CABINET SHALL UTILIZE ITS OWN GROUNDING ELECTRODE.

REVISED: 05/21/2012

CF-4 CONTROLLER CABINET AND UPS CABINET FOUNDATION

PLACEMENT DETAILS

COMMONWEALTH OF VIRGINIA
JEFFREY PHILLIP HOCHANADEL
Lic. No. 052202
02/05/16
PROFESSIONAL ENGINEER

THIS DRAWING PREPARED AT THE Corporate Headquarters
1001 Boulders Parkway | Richmond, VA 23225
TEL 804.200.6500 fax 804.560.1016 www.timmons.com

YOUR VISION ACHIEVED THROUGH OURS.

Site Development | Residential | Infrastructure | Technology

REVISION DESCRIPTION

DATE

DATE: 02/05/16
DRAWN BY: GTS
DESIGNED BY: GTS
CHECKED BY: JPH
SCALE: N/A

TIMMONS GROUP

EVONIK INDUSTRIES
RICHMOND DISTRICT - CITY OF HOPEWELL, VIRGINIA
INTERIM STANDARD SHEET

JOB NO. 37371

SHEET NO. TS(1A)1

These plans and associated documents are the exclusive property of TIMMONS GROUP and may not be reproduced in whole or in part and shall not be used for any purpose whatsoever, inclusive, but not limited to construction, bidding, and/or construction staking without the express written consent of TIMMONS GROUP.

MP-1

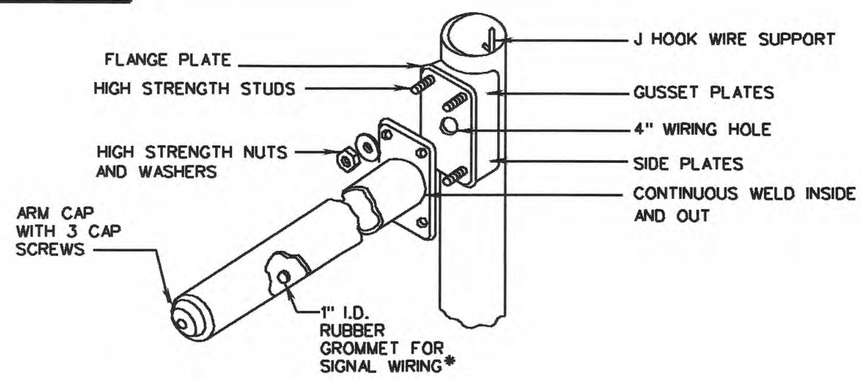

ARM AND SIGNAL ATTACHMENT

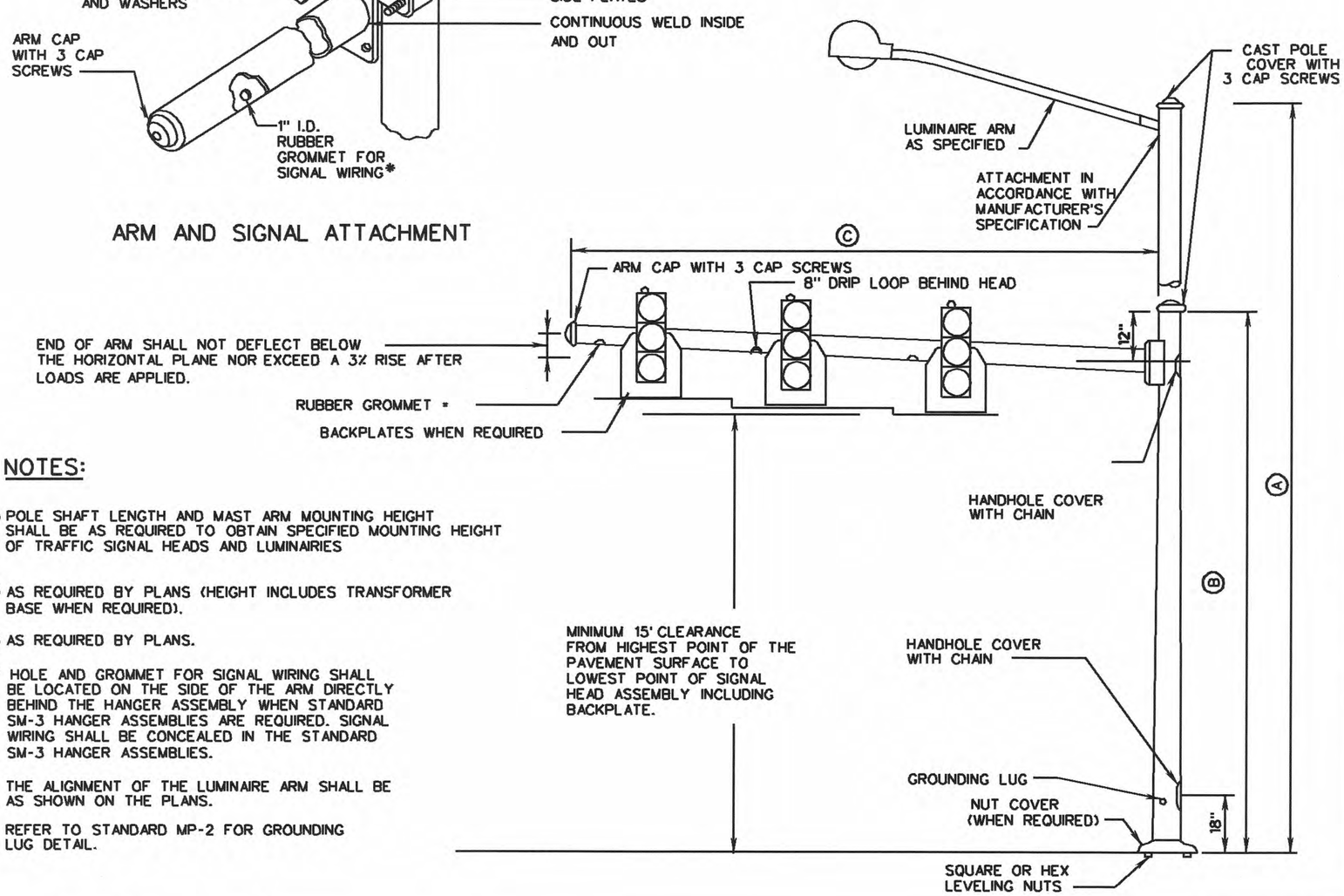

NOTES:

Ⓐ POLE SHAFT LENGTH AND MAST ARM MOUNTING HEIGHT SHALL BE AS REQUIRED TO OBTAIN SPECIFIED MOUNTING HEIGHT OF TRAFFIC SIGNAL HEADS AND LUMINAIRIES

Ⓑ AS REQUIRED BY PLANS (HEIGHT INCLUDES TRANSFORMER BASE WHEN REQUIRED).

Ⓒ AS REQUIRED BY PLANS.

* HOLE AND GROMMET FOR SIGNAL WIRING SHALL BE LOCATED ON THE SIDE OF THE ARM DIRECTLY BEHIND THE HANGER ASSEMBLY WHEN STANDARD SM-3 HANGER ASSEMBLIES ARE REQUIRED. SIGNAL WIRING SHALL BE CONCEALED IN THE STANDARD SM-3 HANGER ASSEMBLIES.

THE ALIGNMENT OF THE LUMINAIRE ARM SHALL BE AS SHOWN ON THE PLANS.

REFER TO STANDARD MP-2 FOR GROUNDING LUG DETAIL.

VDOT ROAD AND BRIDGE STANDARDS		SIGNAL POLE DETAILS MAST ARM AND COMBINATION LUMINAIRE MAST ARM POLE VIRGINIA DEPARTMENT OF TRANSPORTATION	SPECIFICATION REFERENCE
SHEET 1 OF 1	REVISION DATE		700
1302.10	06-15-2009		

COMMONWEALTH OF VIRGINIA
JEFFREY PHILLIP HOCHANADEL
Lic. No. 052202
02/05/16
PROFESSIONAL ENGINEER

THIS DRAWING PREPARED AT THE TIMMONS GROUP OFFICE
1001 Boulders Parkway | Richmond, VA 23225
TEL 804.200.6500 fax 804.560.1016 www.timmons.com

YOUR VISION ACHIEVED THROUGH OURS.

Site Development | Residential | Infrastructure | Technology

REVISION DESCRIPTION

DATE
02/05/16

DRAWN BY: GTS
DESIGNED BY: GTS
CHECKED BY: JPH
SCALE: N/A

TIMMONS GROUP

EVONIK INDUSTRIES
RICHMOND DISTRICT - CITY OF HOPEWELL, VIRGINIA
INTERIM STANDARD SHEET

JOB NO. 37371
SHEET NO. TS(1A)2

These plans and associated documents are the exclusive property of TIMMONS GROUP and may not be reproduced in whole or in part and shall not be used for any purpose whatsoever, inclusive, but not limited to construction, bidding, and/or construction staking without the express written consent of TIMMONS GROUP.

SM-3

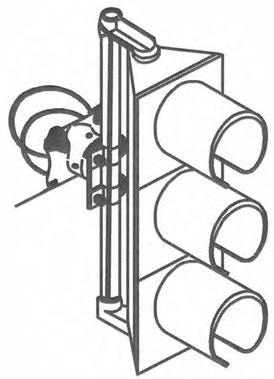

NOTES:

SIGNAL HEAD CABLES SHALL BE CONTINUOUS FROM THE CONTROLLER TO THE NEAREST SIGNAL HEAD TO WHICH IT APPLIES EXCEPT CABLE TERMINATIONS MAY BE ALLOWED ON THE POLE TERMINAL STRIP WHEN REQUIRED BY THE PLANS. THE CABLE SHALL ALSO BE CONTINUOUS FROM THE FIRST SIGNAL HEAD TO ANY ADDITIONAL HEADS WITH TERMINATION ON THE TERMINALS WITHIN THE SIGNAL HEAD HOUSING.

POLE AND HANGER ASSEMBLY HARDWARE REQUIREMENTS

POLE TYPE	HARDWARE TYPE
GALVANIZED STEEL	ALUMINUM OR GALVANIZED IRON
STEEL PAINTED ALUMINUM	ALUMINUM, GALVANIZED IRON OR IRON PAINTED ALUMINUM
STEEL PAINTED OTHER THAN ALUMINUM	ALUMINUM OR IRON PAINTED TO MATCH POLE

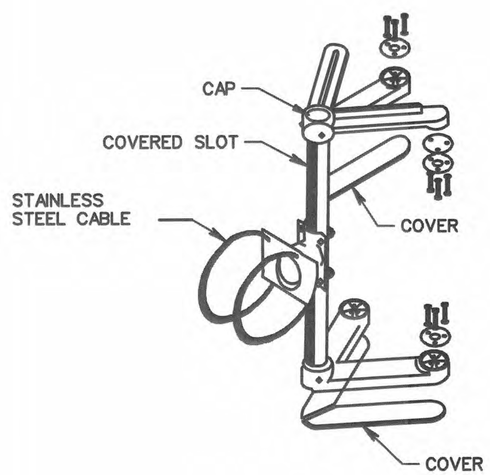

5 SECTION CLUSTER MOUNTING DETAIL

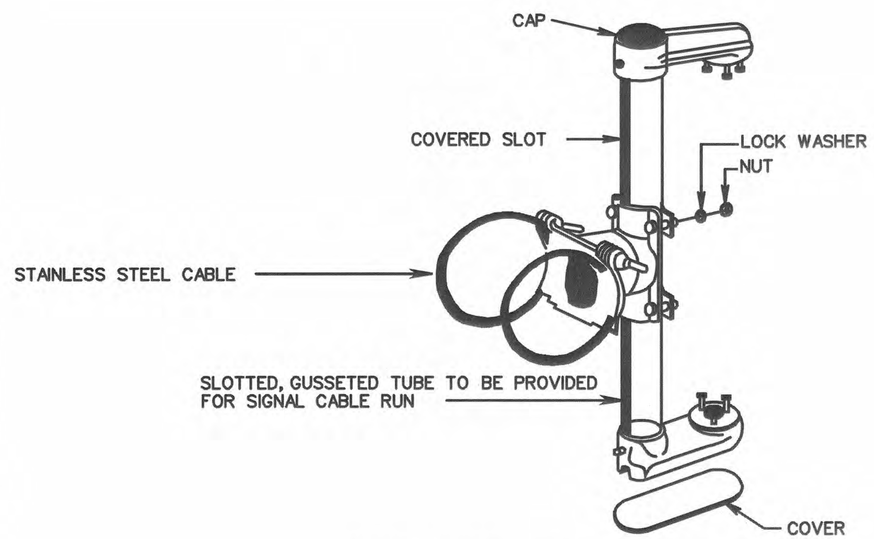

RIGID MAST ARM MOUNTING DETAILS

SPECIFICATION REFERENCE	SIGNAL HEAD MOUNTING DETAILS MAST ARM VIRGINIA DEPARTMENT OF TRANSPORTATION	VDOT ROAD AND BRIDGE STANDARDS
703		REVISION DATE / SHEET 1 OF 1 / 1303.30

COMMONWEALTH OF VIRGINIA
JEFFREY PHILLIP HOSHANADEL
Lic. No. 052202
02/05/16
PROFESSIONAL ENGINEER

THIS DRAWING PREPARED AT THE
Corporate Headquarters
1001 Boulders Parkway | Richmond, VA 23225
TEL 804.200.6500 fax 804.560.1016 www.timmons.com

YOUR VISION ACHIEVED THROUGH OURS.

Site Development | Residential | Infrastructure | Technology

REVISION DESCRIPTION

DATE

DATE 02/05/16
DRAWN BY GTS
DESIGNED BY GTS
CHECKED BY JPH
SCALE N/A

TIMMONS GROUP

EVONIK INDUSTRIES
RICHMOND DISTRICT - CITY OF HOPEWELL, VIRGINIA
INTERIM STANDARD SHEET

JOB NO. 37371
SHEET NO. TS(1A)3

These plans and associated documents are the exclusive property of TIMMONS GROUP and may not be reproduced in whole or in part and shall not be used for any purpose whatsoever, inclusive, but not limited to construction, bidding, and/or construction staking without the express written consent of TIMMONS GROUP.

SMD-1,2

SPAN WIRE INSTALLATION

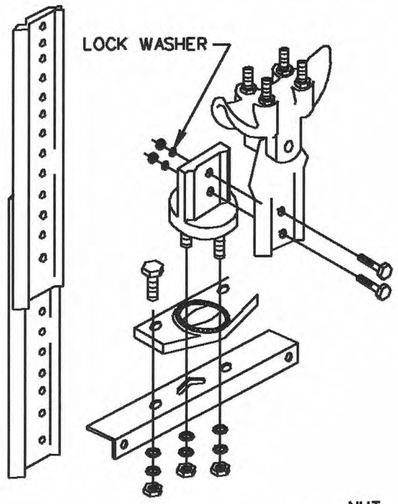

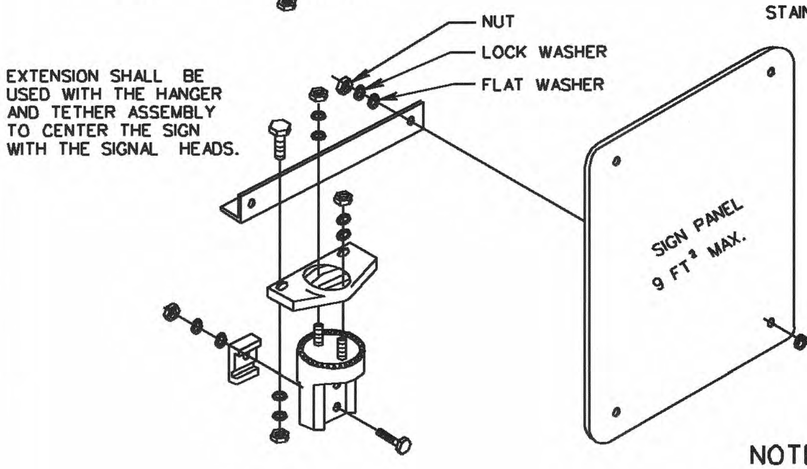

SMD-1

MAST ARM INSTALLATION

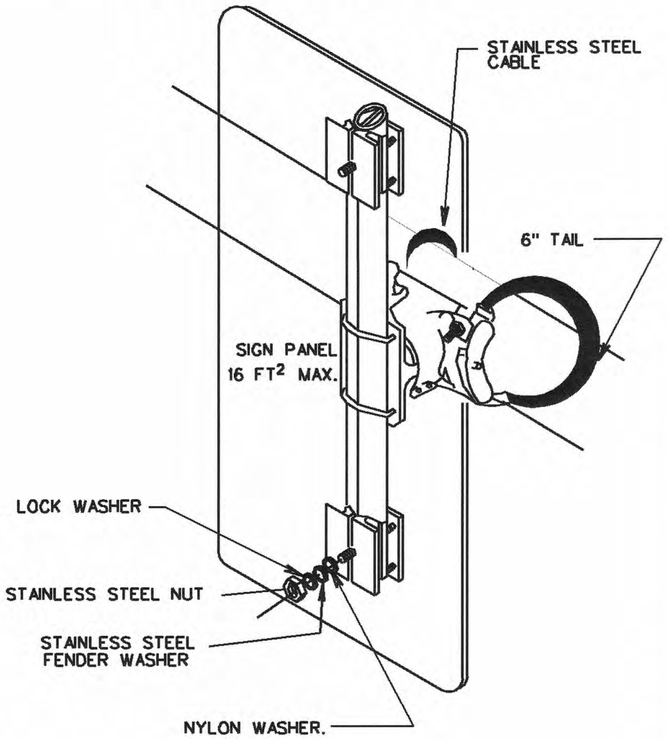

SMD-2

NOTES:

NUTS AND BOLTS USED FOR ATTACHMENT OF SIGN PANEL SHALL BE STAINLESS STEEL AND ¾" IN DIAMETER.

A 1¼" NYLON AND STAINLESS STEEL FENDER WASHER SHALL BE USED ON THE FRONT OF SIGN PANEL WHERE BOLT PASSES THROUGH SIGN PANEL.

ALL NUTS, BOLTS AND WASHERS SHALL BE STAINLESS STEEL OR GALVANIZED STEEL UNLESS OTHERWISE INDICATED

SPACERS SHALL BE INSTALLED BETWEEN THE EYELET OF THE SIGN HANGAR AND THE SPAN WIRE CLAMP TO ELIMINATE ANY GAP.

VDOT ROAD AND BRIDGE STANDARDS		SIGN MOUNTING DETAILS	SPECIFICATION REFERENCE
SHEET 1 OF 1	REVISION DATE	VIRGINIA DEPARTMENT OF TRANSPORTATION	703
1305.10	06-15-2009		

COMMONWEALTH OF VIRGINIA
JEFFREY PHILLIP VHOOHANADEL
Lic. No. 052202
02/05/16
PROFESSIONAL ENGINEER

THIS DRAWING PREPARED AT THE
Corporate Headquarters
1001 Boulders Parkway | Richmond, VA 23225
TEL 804.200.6500 fax 804.560.1016 www.timmons.com

YOUR VISION ACHIEVED THROUGH OURS.

Site Development | Residential | Infrastructure | Technology

DATE	REVISION DESCRIPTION

DATE	02/05/16
DRAWN BY	GTS
DESIGNED BY	GTS
CHECKED BY	JPH
SCALE	N/A

TIMMONS GROUP

EVONIK INDUSTRIES
RICHMOND DISTRICT - CITY OF HOPEWELL, VIRGINIA
INTERIM STANDARD SHEET

JOB NO. 37371

SHEET NO. TS(1A)4

These plans and associated documents are the exclusive property of TIMMONS GROUP and may not be reproduced in whole or in part and shall not be used for any purpose whatsoever, inclusive, but not limited to construction, bidding, and/or construction staking without the express written consent of TIMMONS GROUP.

PF-8

NOTES:

1. ANCHOR BOLTS SHALL HAVE A RING OR NUTS AND WASHERS ON THE ENDS OF BOLTS EMBEDDED IN FOUNDATION.
2. ANCHOR BOLT LAYOUT SHALL BE CHECKED AGAINST LATEST APPROVED STRUCTURE DRAWINGS. A MINIMUM OF EIGHT 2" DIAMETER ANCHOR BOLTS ARE REQUIRED.
3. ALL CONDUITS AS SPECIFIED IN THE CONTRACT DOCUMENTS. IN ADDITION 1 - 1" MIN. CONDUIT REQUIRED FOR GROUNDING ELECTRODE CONDUCTOR. 2 - 2" PVC CONDUITS REQUIRED FOR FUTURE USE. NOTE THAT ADDITIONAL SPARE CONDUITS MAY BE REQUIRED BY THE CONTRACT DOCUMENTS.
4. IF NEEDED IN SLOPED CONDITIONS TO MAINTAIN POSITIVE DRAINAGE AROUND THE FOUNDATION AND TO PROVIDE THE CLEARANCES SHOWN IN DETAIL A, THE CONTRACTOR SHALL RE-GRADE AND ADD RETAINING CURB OR MATERIAL ON THE UP SLOPE WHEN APPROVED BY THE ENGINEER. RE-GRADING AND RETAINING CURB SHALL BE INCLUDED IN THE PRICE BID FOR FOUNDATION.
5. FOUNDATION SHALL BE DESIGNED FOR TORSION. WINGS MAY BE USED FOR TORSIONAL RESISTANCE IF REQUIRED.
6. ANCHOR BOLTS AND BOLT TEMPLATE SHALL BE FURNISHED WITH POLE. POLE SHALL BE CENTERED ON FOUNDATION.
7. EACH FOUNDATION SHALL BE PERMANENTLY MARKED TO INDICATE ALL SIDES FROM WHICH CONDUITS PASS. THIS MARK SHALL BE MADE WITH A TROWEL WHEN FINISHING THE CONCRETE AND SHALL BE 1/4" DEEP AND 4" TO 6" LONG. LOCATIONS OF EMPTY CONDUITS SHALL HAVE AN ADDITIONAL 2" LONG MARK MADE PERPENDICULAR TO AND CENTERED ON THIS MARKING.
8. GROUNDING BUSHINGS SHALL BE INSTALLED ON EACH END OF METAL CONDUITS.
9. EMPTY CONDUITS SHALL BE PLUGGED TO PREVENT MOISTURE AND RODENT ENTRY.
10. BELL ENDS SHALL BE INSTALLED ON EACH END OF PVC CONDUITS.
11. NO MORTAR, GROUT, OR CONCRETE SHALL BE PLACED BETWEEN BOTTOM OF BASE PLATE AND TOP OF FOUNDATION.
12. HEIGHT, WIDTH, DEPTH, AND REINFORCEMENT OF FOUNDATION SHALL BE AS REQUIRED BY FOUNDATION DESIGNER.
13. OPEN ENDS OF CONDUITS WITH CONDUCTORS INSTALLED SHALL BE SEALED WITH AN APPROVED OUTDOOR, WATERPROOF, SILICONE SEALANT. THE SEALANT SHALL NOT HAVE A DELETERIOUS EFFECT ON CABLE COVERINGS.
14. FOUNDATIONS SHALL NOT BE INSTALLED IN THE CENTER OF A DRAINAGE DITCH. IF APPROVED BY THE ENGINEER, FOUNDATIONS MAY BE INSTALLED IN THE SLOPE OF A DRAINAGE DITCH AT AN APPROVED HEIGHT ABOVE GRADE. THE FOUNDATION SHALL NOT BE PLACED IN THE FRONT SLOPE UNLESS THE ENGINEER DETERMINES THAT BACK SLOPE PLACEMENT IS NOT FEASIBLE.
15. THE EDGE OF THE FOUNDATION SHALL BE 1'-0" MIN. FROM THE EDGE OF A PEDESTRIAN PATH, OR 3'-0" MIN. FROM THE EDGE OF A SHARED USE PATH (SEE DETAIL B). IF APPROVED BY THE ENGINEER, FOUNDATIONS MAY BE PLACED IMMEDIATELY ADJACENT TO PEDESTRIAN PATH.
16. SPREAD FOOTING MAY BE USED IF APPROVED BY THE ENGINEER.

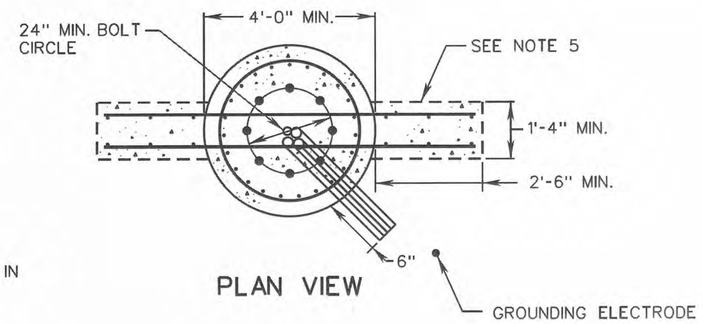

PLAN VIEW

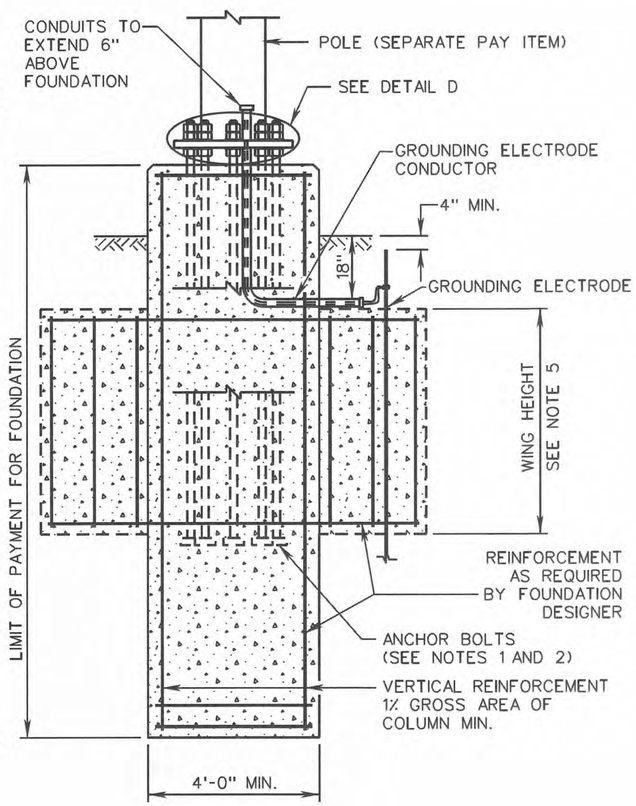

SIDE VIEW

VDOT ROAD AND BRIDGE STANDARDS	A COPY OF THE ORIGINAL SEALED AND SIGNED DRAWING IS ON FILE IN THE CENTRAL OFFICE.	SPECIFICATION REFERENCE
SHEET 1 OF 2 / REVISION DATE 07/15	SIGNAL POLE FOUNDATION INSTALLATION DETAILS	700
1310.12	VIRGINIA DEPARTMENT OF TRANSPORTATION	

COMMONWEALTH OF VIRGINIA
JEFFREY PHILLIP BOCHANADEL
Lic. No. 052202
02/05/16
PROFESSIONAL ENGINEER

THIS DRAWING PREPARED AT THE Corporate Headquarters
1001 Boulders Parkway | Richmond, VA 23225
TEL 804.200.6500 fax 804.560.1016 www.timmons.com

YOUR VISION ACHIEVED THROUGH OURS.

Site Development | Residential | Infrastructure | Technology

DATE	REVISION DESCRIPTION

DATE	02/05/16
DRAWN BY	GTS
DESIGNED BY	GTS
CHECKED BY	JPH
SCALE	N/A

TIMMONS GROUP

EVONIK INDUSTRIES
RICHMOND DISTRICT - CITY OF HOPEWELL, VIRGINIA
INTERIM STANDARD SHEET

JOB NO. 37371
SHEET NO. TS(1A)5

These plans and associated documents are the exclusive property of TIMMONS GROUP and may not be reproduced in whole or in part and shall not be used for any purpose whatsoever, inclusive, but not limited to construction, bidding, and/or construction staking without the express written consent of TIMMONS GROUP.

PF-8

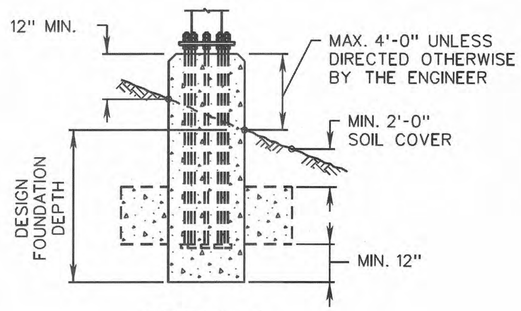

DETAIL A
FOUNDATION NOT IN SIDEWALK DETAIL

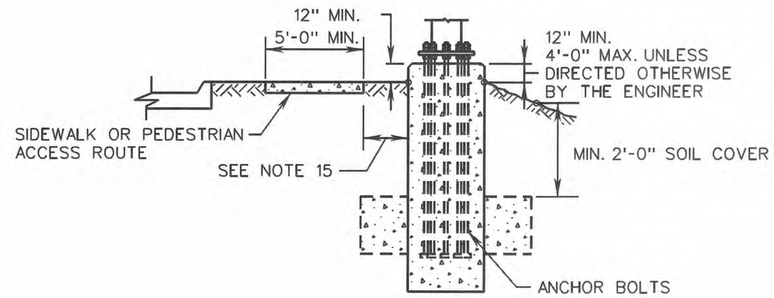

DETAIL B
FOUNDATION ADJACENT TO SIDEWALK DETAIL

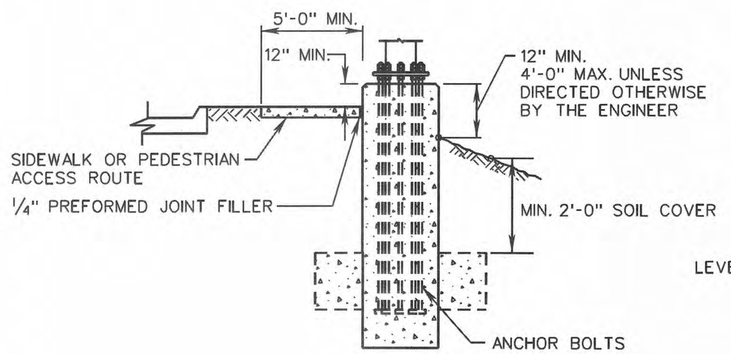

DETAIL C
ALTERNATE FOUNDATION
ADJACENT TO SIDEWALK DETAIL
(IF APPROVED BY THE ENGINEER)

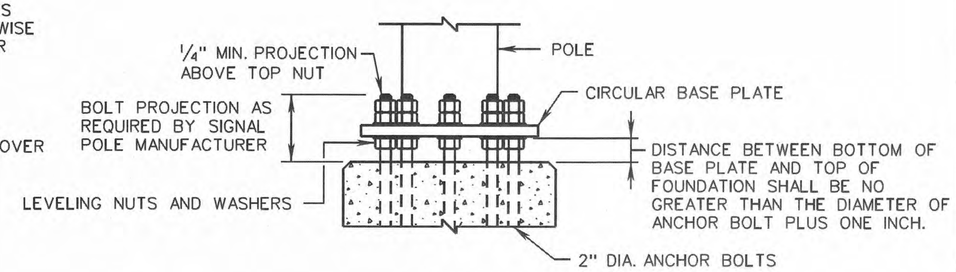

DETAIL D
ANCHOR BOLT AND BASE
PLATE CONNECTION DETAIL

SPECIFICATION REFERENCE	A COPY OF THE ORIGINAL SEALED AND SIGNED DRAWING IS ON FILE IN THE CENTRAL OFFICE.	VDOT ROAD AND BRIDGE STANDARDS	
700	SIGNAL POLE FOUNDATION INSTALLATION DETAILS VIRGINIA DEPARTMENT OF TRANSPORTATION	REVISION DATE 07/15	SHEET 2 OF 2 1310. 13

COMMONWEALTH OF VIRGINIA
JEFFREY PHILLIP HOCTANADEL
Lic. No. 052202
02/05/16
PROFESSIONAL ENGINEER

THIS DRAWING PREPARED AT THE
Corporate Headquarters
1001 Boulders Parkway | Richmond, VA 23225
TEL 804.200.6500 fax 804.560.1016 www.timmons.com

YOUR VISION ACHIEVED THROUGH OURS.

Site Development | Residential | Infrastructure | Technology

REVISION DESCRIPTION	DATE

TIMMONS GROUP

EVONIK INDUSTRIES
RICHMOND DISTRICT - CITY OF HOPEWELL, VIRGINIA
INTERIM STANDARD SHEET

DATE	DRAWN BY	DESIGNED BY	CHECKED BY	SCALE
02/05/16	GTS	GTS	JPH	N/A

JOB NO. 37371
SHEET NO. TS(1A)6

These plans and associated documents are the exclusive property of TIMMONS GROUP and may not be reproduced in whole or in part and shall not be used for any purpose whatsoever, inclusive, but not limited to construction, bidding, and/or construction staking without the express written consent of TIMMONS GROUP.

SE-5

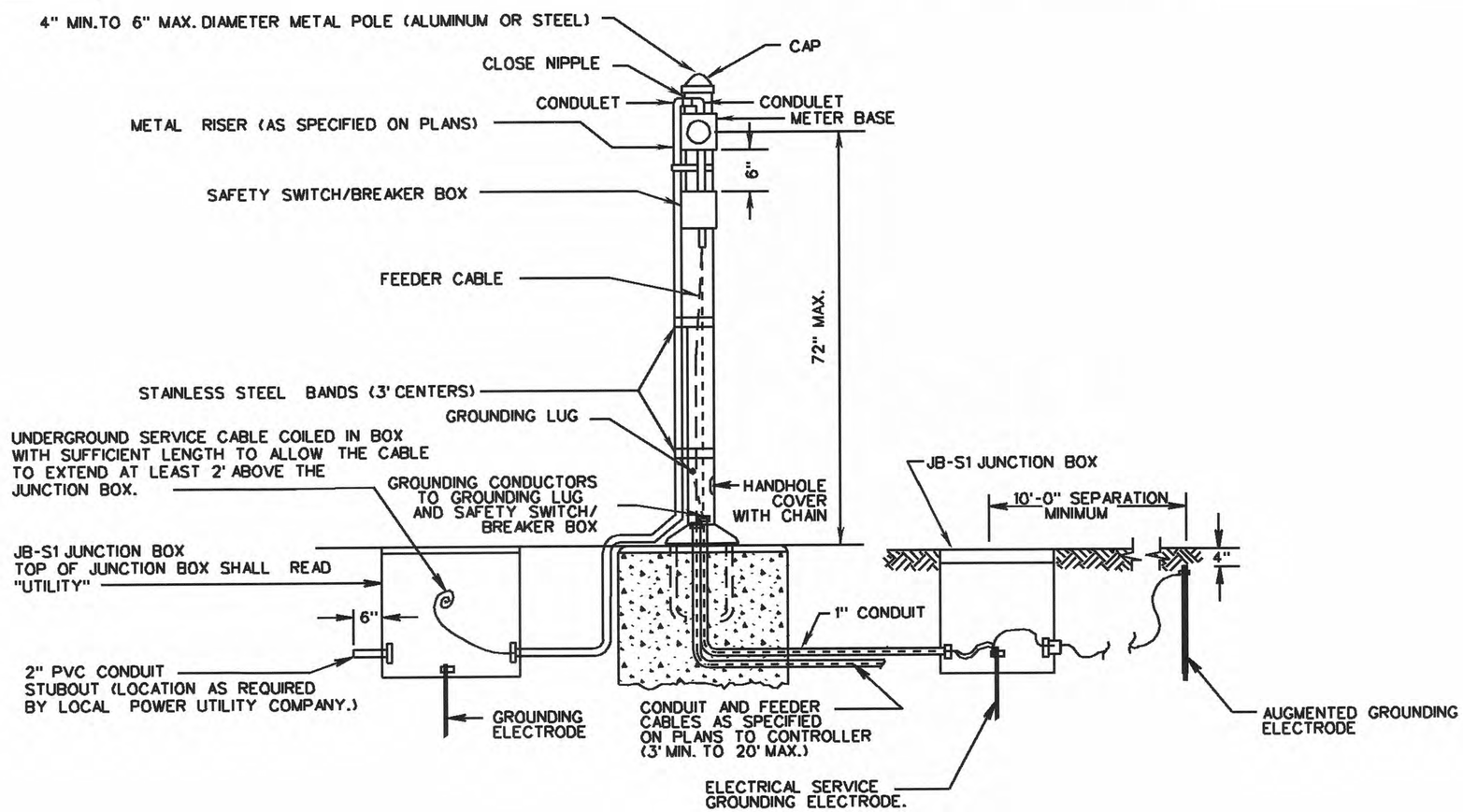

PEDESTAL POLE WITH GROUND MOUNTED CABINET

NOTES:

NO OTHER CONDUCTORS SHALL BE RUN IN THE SAME CONDUIT WITH ELECTRICAL SERVICE CABLE.

LOCAL POWER UTILITY COMPANY WILL INSTALL SERVICE POWER UTILITY CABLE FROM THEIR POWER SOURCE TO THE JUNCTION BOX AND MAKE REQUIRED SPLICES TO THE SERVICE CABLE COILED IN THE JUNCTION BOX.

FOUNDATION SHALL BE CLASS A3 CONCRETE, 18" DIAMETER X 18" DEEP, AND COST OF FOUNDATION SHALL BE INCLUDED WITH THE PAY ITEM FOR ELECTRICAL SERVICE.

ANCHOR BOLTS AND BOLT CIRCLE TEMPLATE SHALL BE FURNISHED BY POLE MANUFACTURER.

THIS STANDARD IS APPLICABLE FOR ALL ELECTRICAL SERVICES OTHER THAN 480Y/277.

GROUNDING BUSHINGS SHALL BE INSTALLED ON EACH END OF METAL CONDUITS.

EMPTY CONDUITS SHALL BE PLUGGED TO PREVENT MOISTURE AND RODENT ENTRY.

OPEN ENDS OF CONDUITS WITH CONDUCTORS INSTALLED SHALL BE SEALED WITH AN APPROVED SOFT, PLIABLE, AND EASILY REMOVABLE WATERPROOF SEALANT. THE SEALANT SHALL NOT HAVE A DELETERIOUS EFFECT ON CABLE COVERINGS.

BELL ENDS SHALL BE INSTALLED ON EACH END OF PVC CONDUITS.

STAINLESS STEEL BANDS REQUIRED FOR METER BASE AND SAFETY SWITCH/BREAKER BOX

REFER TO STANDARD MP-2 FOR GROUNDING LUG DETAILS.

VDOT ROAD AND BRIDGE STANDARDS		ELECTRICAL SERVICE INSTALLATION DETAILS VIRGINIA DEPARTMENT OF TRANSPORTATION	SPECIFICATION REFERENCE
SHEET 1 OF 1	REVISION DATE		700
1312.50	06-15-2009		

COMMONWEALTH OF VIRGINIA
JEFFREY PHILLIP BOCHANADEL
Lic. No. 052202
02/05/16
PROFESSIONAL ENGINEER

THIS DRAWING PREPARED AT THE Corporate Headquarters 1001 Boulders Parkway, Richmond, VA 23225 TEL 804.200.6500 fax 804.560.1016 www.timmons.com

YOUR VISION ACHIEVED THROUGH OURS.

Site Development | Residential | Infrastructure | Technology

REVISION DESCRIPTION

DATE

DATE 02/05/16
DRAWN BY GTS
DESIGNED BY GTS
CHECKED BY JPH
SCALE N/A

TIMMONS GROUP

EVONIK INDUSTRIES
RICHMOND DISTRICT - CITY OF HOPEWELL, VIRGINIA
INTERIM STANDARD SHEET

JOB NO. 37371
SHEET NO. TS(1A)7

These plans and associated documents are the exclusive property of TIMMONS GROUP and may not be reproduced in whole or in part and shall not be used for any purpose whatsoever, inclusive, but not limited to construction, bidding, and/or construction staking without the express written consent of TIMMONS GROUP.

JB-S1, S2, S3

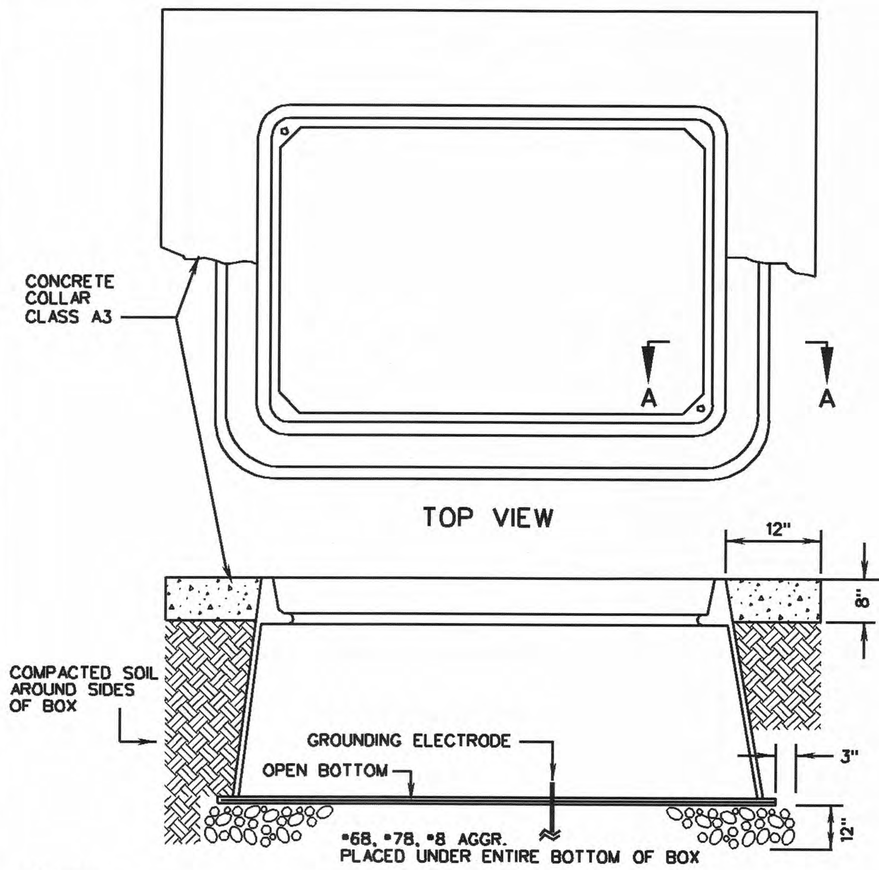

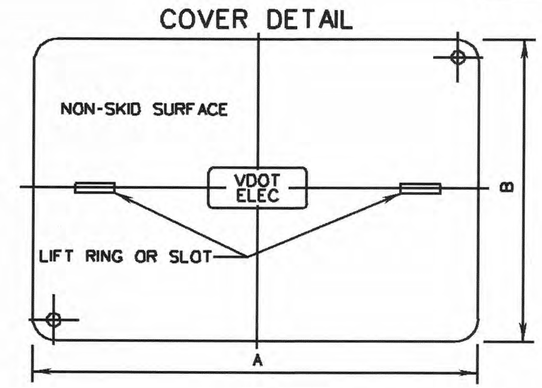

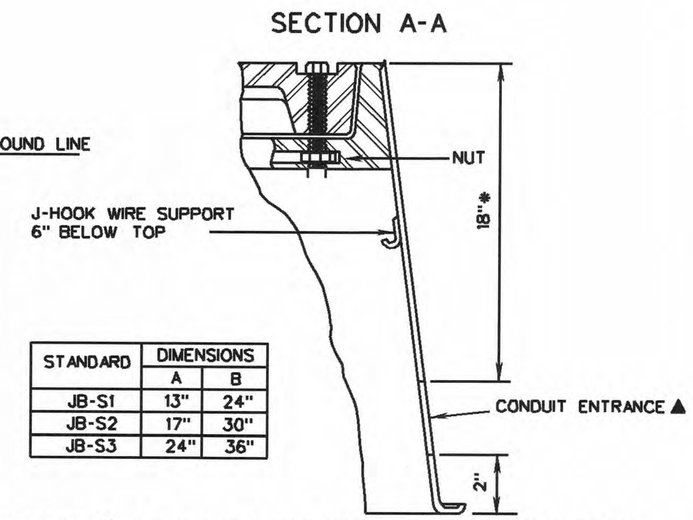

STANDARD	DIMENSIONS	
	A	B
JB-S1	13"	24"
JB-S2	17"	30"
JB-S3	24"	36"

NOTES:

JUNCTION BOXES MAY BE STRAIGHT OR FLARED WALL IN DESIGN. MATERIALS SHALL CONFORM TO SECTION 238 OF THE ROAD & BRIDGE SPECIFICATIONS.

BELL ENDS SHALL BE INSTALLED ON THE ENDS OF PVC CONDUITS.

GROUNDING BUSHINGS SHALL BE INSTALLED ON THE ENDS OF METAL CONDUITS.

BELL ENDS AND BUSHINGS SHALL BE PLUGGED TO PREVENT MOISTURE AND RODENT ENTRY.

*DEPTH OF CONDUIT ENTRANCE FOR USE OF MAGNETIC DETECTORS SHALL BE IN ACCORDANCE WITH STANDARD TD-2.

CONDUIT ENTRANCES SHALL BE LOCATED AS SHOWN ON THE PLANS.

THE COVER SHALL HAVE A NON-SKID SURFACE WITH LETTERS CAST IN THE DEPRESSION ON TOP. THE LETTERS "VDOT ELEC", "VDOT TRAF", "VDOT COMM" OR UTILITY AS APPLICABLE ARE TO BE 1" WIDE. COVERS USED FOR JUNCTION BOXES INSTALLED WITHIN MUNICIPALITIES AND NOT MAINTAINED BY VDOT SHALL NOT REQUIRE THE VDOT REFERENCE.

ALL JUNCTION BOXES SHALL BE INSTALLED WITH A GROUNDING ELECTRODE

TWO RECESSED ⅜" S.S. HEX HEAD BOLTS ARE REQUIRED FOR EACH COVER.

▲ A MINIMUM 2" DIAMETER CONDUIT ENTRANCE IS REQUIRED, UNLESS OTHERWISE SPECIFIED ON THE PLANS.

J-HOOK WIRE SUPPORTS SHALL BE SECURELY ATTACHED TO THE JUNCTION BOX WITH A BOLT AND NUT WITH A NEOPRENE WASHER OR AN EXPANSION FITTING.

CONDUITS SHALL EXTEND 2" TO 3" MAX. INTO THE INSIDE WALL OF THE JUNCTION BOX.

THE JUNCTION BOX MAY BE A TWO PIECE DESIGN WITH THE TOP SECTION NO LESS THAN 17" IN DEPTH.

VOIDS RESULTING FROM ENTRANCE OF CONDUITS INTO JUNCTION BOXES SHALL BE COMPLETELY FILLED WITH AN APPROVED MATERIAL.

SPECIFICATION REFERENCE	JUNCTION BOX FOR NON-DELIBERATE TRAFFIC USE	VDOT ROAD AND BRIDGE STANDARDS
700 238	VIRGINIA DEPARTMENT OF TRANSPORTATION	REVISION DATE 6-15-09 — SHEET 1 OF 1 — 1317.20

COMMONWEALTH OF VIRGINIA
JEFFREY PHILLIP HUCHANADEL
Lic. No. 052202
02/05/16
PROFESSIONAL ENGINEER

THIS DRAWING PREPARED AT THE Corporate Headquarters
1001 Boulders Parkway | Richmond, VA 23225
TEL 804.200.6500 fax 804.560.1016 www.timmons.com

YOUR VISION ACHIEVED THROUGH OURS.

Site Development | Residential | Infrastructure | Technology

DATE	REVISION DESCRIPTION

TIMMONS GROUP

DATE	02/05/16
DRAWN BY	GTS
DESIGNED BY	GTS
CHECKED BY	JPH
SCALE	N/A

EVONIK INDUSTRIES
RICHMOND DISTRICT - CITY OF HOPEWELL, VIRGINIA
INTERIM STANDARD SHEET

JOB NO. 37371

SHEET NO. TS(1A)8

These plans and associated documents are the exclusive property of TIMMONS GROUP and may not be reproduced in whole or in part and shall not be used for any purpose whatsoever, inclusive, but not limited to construction, bidding, and/or construction staking without the express written consent of TIMMONS GROUP.

ECI-1

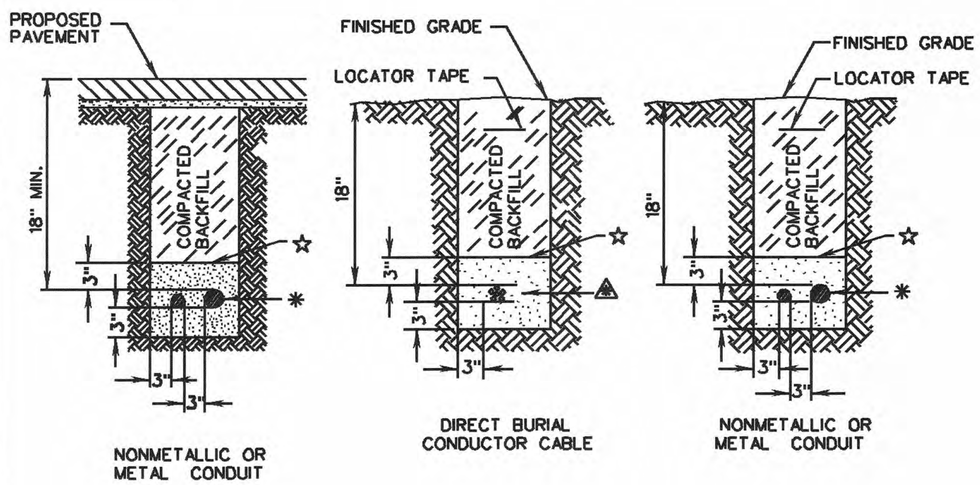

NON - PAVEMENT AND PROPOSED PAVEMENT AREA INSTALLATION

ECI-2

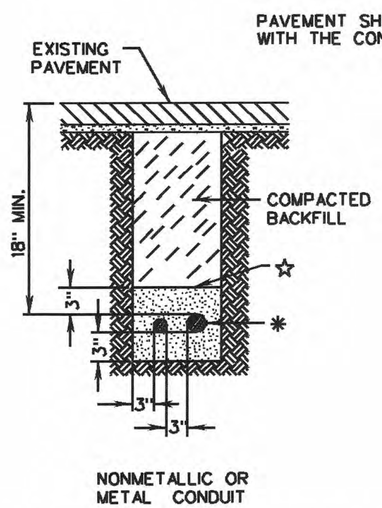

EXISTING PAVEMENT AREA INSTALLATION

NOTES:

CONTRACTOR SHALL INSTALL A 4" MINIMUM TO 6" MAXIMUM WIDE RED PLASTIC LOCATOR TAPE 6" TO 8" BELOW FINISHED GRADE AND DIRECTLY ABOVE BURIED CONDUIT OR CONDUCTOR CABLES, EXCEPT UNDER PAVEMENT.

CONDUIT INSTALLED UNDER EXISTING OR PROPOSED ROADWAYS FOR DIRECT BURIED CABLES SHALL EXTEND 24" BEYONDTHE PAVED SURFACE AND/OR SIDEWALK.

WHERE CONDUIT FOR POWER AND CONDUIT FOR COMMUNICATION ARE TO BE INSTALLED IN CLOSE PROXIMITY TO EACH OTHER, CONDUITS SHALL BE PLACED PARALLEL IN A COMMON TRENCH WITH NO LESS THAN 6" OF SEPARATION SEPARATION BETWEEN CONDUIT SYSTEMS.

☆ BACKFILL MATERIAL BELOW THIS LEVEL SHALL BE SANDY FILL (FREE OF ANY STONES, CINDERS, WOOD, ROOTS, DEBRIS, ETC.)

✱ ONE OR MORE CONDUITS AS REQUIRED.

⚠ ONE OR MORE CONDUCTOR CABLES AS REQUIRED.

OFFSETTING OF CONDUIT MAY BE USED FOR TIEING INTO EXISTING CONDUIT SYSTEMS OR BYPASSING OBSTRUCTIONS AS DIRECTED BY THE ENGINEER.

WHEN OFFSETTING CONDUIT TO BYPASS AN OBSTRUCTION, THE CONDUIT SHALL MAINTAIN A MINIMUM CLEARANCE OF 12" FROM THE CLOSEST POINT OF THE OBSTRUCTION.

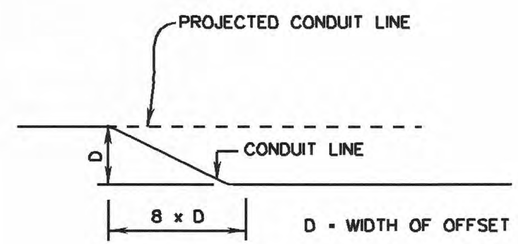

METHOD OF OFFSETTING CONDUIT

VDOT ROAD AND BRIDGE STANDARDS		ELECTRICAL CONDUIT AND CONDUCTOR CABLE UNDERGROUND INSTALLATION VIRGINIA DEPARTMENT OF TRANSPORTATION	SPECIFICATION REFERENCE
SHEET 1 OF 1	REVISION DATE		700
1318.10	06-15-2009		

COMMONWEALTH OF VIRGINIA
JEFFREY PHILLIP MOCHANADEL
Lic. No. 052202
02/05/16
PROFESSIONAL ENGINEER

THIS DRAWING PREPARED AT THE Corporate Headquarters
1001 Boulders Parkway | Richmond, VA 23225
TEL 804.200.6500 fax 804.560.1016 www.timmons.com

YOUR VISION ACHIEVED THROUGH OURS.

Site Development | Residential | Infrastructure | Technology

REVISION DESCRIPTION

DATE

DATE 02/05/16
DRAWN BY GTS
DESIGNED BY GTS
CHECKED BY JPH
SCALE N/A

TIMMONS GROUP

EVONIK INDUSTRIES
RICHMOND DISTRICT - CITY OF HOPEWELL, VIRGINIA
INTERIM STANDARD SHEET

JOB NO. 37371
SHEET NO. TS(1A)9

These plans and associated documents are the exclusive property of TIMMONS GROUP and may not be reproduced in whole or in part and shall not be used for any purpose whatsoever, inclusive, but not limited to construction, bidding, and/or construction staking without the express written consent of TIMMONS GROUP.

PM-3

PATTERNS OF LONGITUDINAL LINES

THRU LANES: USE BROKEN LINE (10' LINE SEGMENTS / 30' GAPS).

TAPERS MORE THAN 100': USE DOTTED EXTENSION (2' LINE SEGMENTS / 4' GAPS).

TAPERS 100' OR LESS: DO NOT USE DOTTED EXTENSION UNLESS SPECIFIED IN THE CONTRACT DOCUMENTS.

NOTES:

1. STOP LINES SHALL BE 24 INCHES IN WIDTH.
2. ALL PAVEMENT MARKINGS SHALL BE INSTALLED IN ACCORDANCE WITH THESE STANDARDS, THE MUTCD, AND THE VIRGINIA SUPPLEMENT TO THE MUTCD, UNLESS OTHERWISE SPECIFIED IN THE CONTRACT DOCUMENTS.
3. THE LOCATION, WIDTH, AND TYPE OF THE PAVEMENT MARKINGS SHALL BE AS SPECIFIED IN THE CONTRACT DOCUMENTS.
4. TURN ARROWS SHALL BE IN ACCORDANCE WITH SHEET 3.
5. CROSSWALK MARKINGS, IF PROVIDED, SHALL BE IN ACCORDANCE WITH SHEET 4.

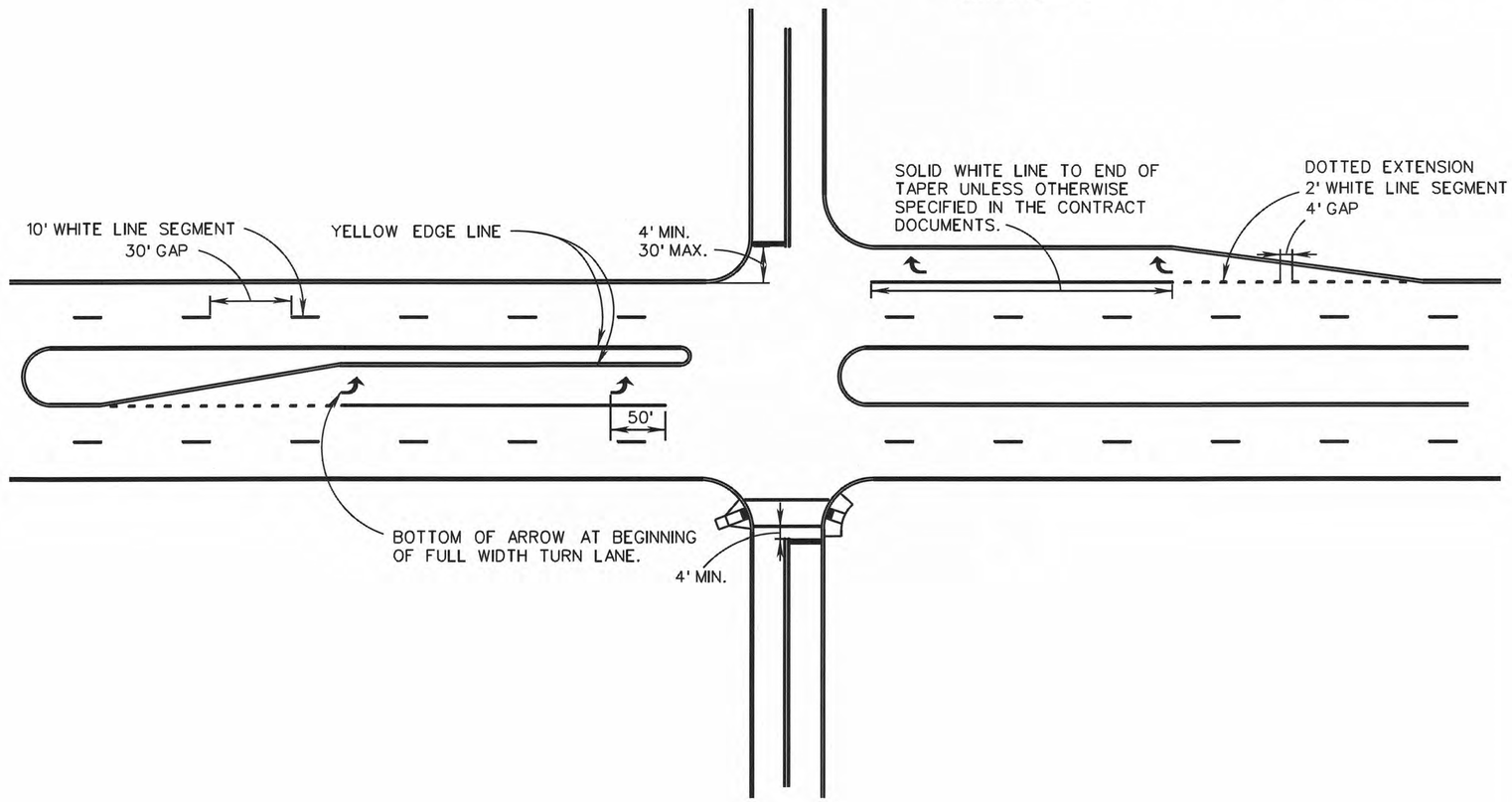

SPECIFICATION REFERENCE	A COPY OF THE ORIGINAL SEALED AND SIGNED DRAWING IS ON FILE IN THE CENTRAL OFFICE.	VDOT ROAD AND BRIDGE STANDARDS	
704	TYPICAL PAVEMENT MARKING UNSIGNALIZED INTERSECTIONS VIRGINIA DEPARTMENT OF TRANSPORTATION	REVISION DATE 01/15	SHEET 1 OF 4 1330.30

COMMONWEALTH OF VIRGINIA
JEFFREY PHILLIP HOCHANADEL
Lic. No. 052202
02/05/16
PROFESSIONAL ENGINEER

THIS DRAWING PREPARED AT THE Corporate headquarters
1001 Boulders Parkway | Richmond, VA 23225
TEL 804.200.6500 fax 804.560.1016 www.timmons.com

YOUR VISION ACHIEVED THROUGH OURS.

Site Development | Residential | Infrastructure | Technology

DATE	REVISION DESCRIPTION

TIMMONS GROUP

DATE	02/05/16
DRAWN BY	GTS
DESIGNED BY	GTS
CHECKED BY	JPH
SCALE	N/A

EVONIK INDUSTRIES
RICHMOND DISTRICT - CITY OF HOPEWELL, VIRGINIA
INTERIM STANDARD SHEET

JOB NO. 37371

SHEET NO. TS(1A)10

These plans and associated documents are the exclusive property of TIMMONS GROUP and may not be reproduced in whole or in part and shall not be used for any purpose whatsoever, inclusive, but not limited to construction, bidding, and/or construction staking without the express written consent of TIMMONS GROUP.

PM-3

NOTES:

1. STOP LINES SHALL BE 24 INCHES IN WIDTH.
2. ALL PAVEMENT MARKINGS SHALL BE INSTALLED IN ACCORDANCE WITH THESE STANDARDS, THE MUTCD, AND THE VIRGINIA SUPPLEMENT TO THE MUTCD, UNLESS OTHERWISE SPECIFIED IN THE CONTRACT DOCUMENTS.
3. THE LOCATION, WIDTH, AND TYPE OF THE PAVEMENT MARKINGS SHALL BE AS SPECIFIED IN THE CONTRACT DOCUMENTS.
4. TURN ARROWS SHALL BE IN ACCORDANCE WITH SHEET 3.
5. CROSSWALK MARKINGS, IF PROVIDED, SHALL BE IN ACCORDANCE WITH SHEET 4.

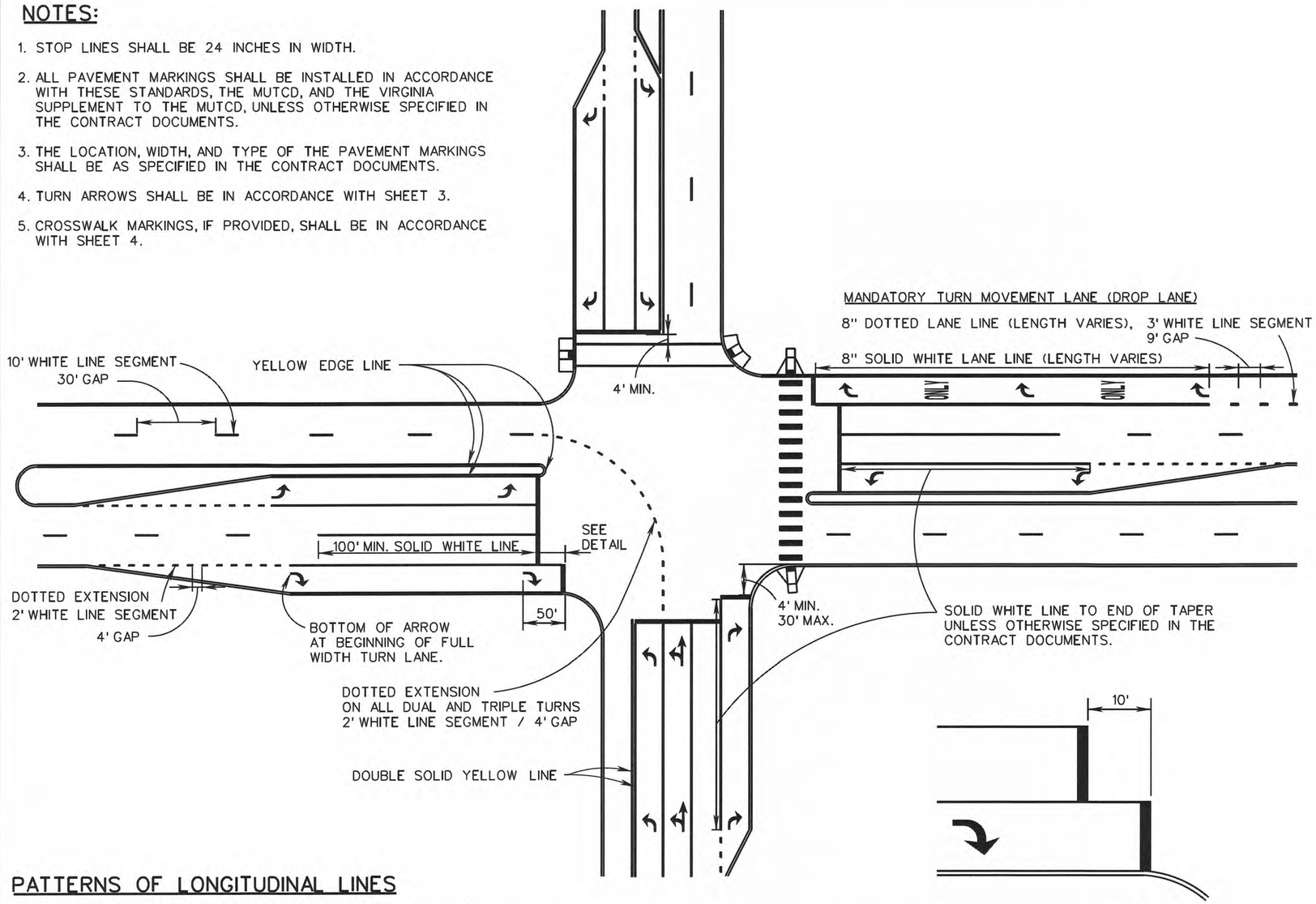

DETAIL FOR OPTIONAL STAGGERED STOP LINES (ON A LANE-BY-LANE BASIS)

PATTERNS OF LONGITUDINAL LINES

THRU LANES: USE BROKEN LINE (10' LINE SEGMENTS / 30' GAPS).

TAPERS MORE THAN 100': USE DOTTED EXTENSION (2' LINE SEGMENTS / 4' GAPS).

TAPERS 100' OR LESS: DO NOT USE DOTTED EXTENSION UNLESS SPECIFIED IN THE CONTRACT DOCUMENTS.

VDOT ROAD AND BRIDGE STANDARDS	A COPY OF THE ORIGINAL SEALED AND SIGNED DRAWING IS ON FILE IN THE CENTRAL OFFICE.		SPECIFICATION REFERENCE
SHEET 2 OF 4	REVISION DATE NEW 01/15	TYPICAL PAVEMENT MARKING SIGNALIZED INTERSECTIONS VIRGINIA DEPARTMENT OF TRANSPORTATION	704
1330. 31			

COMMONWEALTH OF VIRGINIA
JEFFREY PHILLIP HOCHANADEL
Lic. No. 052202
02/05/16
PROFESSIONAL ENGINEER

THIS DRAWING PREPARED AT THE Dominion Headquarters
1001 Boulders Parkway | Richmond, VA 23225
TEL 804.200.6500 fax 804.560.1016 www.timmons.com

YOUR VISION ACHIEVED THROUGH OURS.

Site Development | Residential | Infrastructure | Technology

REVISION DESCRIPTION

DATE

DATE 02/05/16
DRAWN BY GTS
DESIGNED BY GTS
CHECKED BY JPH
SCALE N/A

TIMMONS GROUP

EVONIK INDUSTRIES
RICHMOND DISTRICT - CITY OF HOPEWELL, VIRGINIA
INTERIM STANDARD SHEET

JOB NO. 37371
SHEET NO. TS(1A)11

These plans and associated documents are the exclusive property of TIMMONS GROUP and may not be reproduced in whole or in part and shall not be used for any purpose whatsoever, inclusive, but not limited to construction, bidding, and/or construction staking without the express written consent of TIMMONS GROUP.

PM-3

TURN ARROWS

TURN ARROWS REQUIRED IN ACCORDANCE WITH THE FOLLOWING, UNLESS OTHERWISE SPECIFIED IN THE CONTRACT DOCUMENTS.

TURN LANE LENGTH	NUMBER AND POSITION OF ARROWS
LESS THAN 100' (EXCLUSIVE OF TAPER): 1 ARROW	1 ARROW LOCATED AT THE BEGINNING OF THE SOLID LANE LINE.
100' TO 300' (EXCLUSIVE OF TAPER): 2 ARROWS	1 ARROW LOCATED AT BEGINNING OF FULL WIDTH TURN LANE. 1 ARROW LOCATED 50' BACK FROM STOP LINE OR END OF LANE LINE.
GREATER THAN 300' (EXCLUSIVE OF TAPER): 3 ARROWS	1 ARROW LOCATED AT BEGINNING OF FULL WIDTH TURN LANE. 1 ARROW LOCATED 50' BACK FROM STOP LINE OR END LANE LINE. 1 ARROW LOCATED AT MIDPOINT BETWEEN THE OTHER TWO ARROWS.

MANDATORY TURN MOVEMENT LANES (DROP LANE)

MARKINGS REQUIRED IN ACCORDANCE WITH THE FOLLOWING, UNLESS OTHERWISE SPECIFIED IN THE CONTRACT DOCUMENTS.

TURN ARROWS	1 ARROW LOCATED AT BEGINNING WIDE WHITE SOLID LANE LINE. 1 ARROW LOCATED 50' BACK FROM STOP LINE. 1 ARROW LOCATED AT MIDPOINT OF 8" WHITE SOLID LANE LINE.
ONLY WORD MARKINGS	SPACED MIDWAY BETWEEN ARROWS.

NOTES:

1. ALL PAVEMENT MARKINGS SHALL BE INSTALLED IN ACCORDANCE WITH THESE STANDARDS, THE MUTCD, AND THE VIRGINIA SUPPLEMENT TO THE MUTCD, UNLESS OTHERWISE SPECIFIED IN THE CONTRACT DOCUMENTS.
2. THE LOCATION, WIDTH, AND TYPE OF THE PAVEMENT MARKINGS SHALL BE AS SPECIFIED IN THE CONTRACT DOCUMENTS.
3. WHEN "ONLY" WORD MARKINGS ARE USED, THESE MARKINGS SHALL BE SPACED MIDWAY BETWEEN THE TURN ARROWS.
4. CROSSWALK MARKINGS, IF PROVIDED, SHALL BE IN ACCORDANCE WITH SHEET 4.

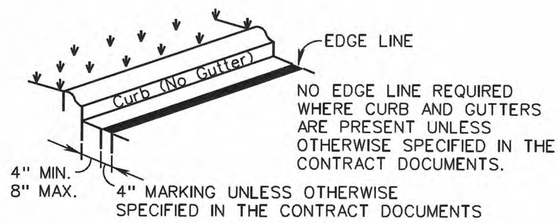

DETAIL FOR LOCATION OF EDGE LINES ON CURB SECTIONS OF ROADWAY (NO GUTTER)

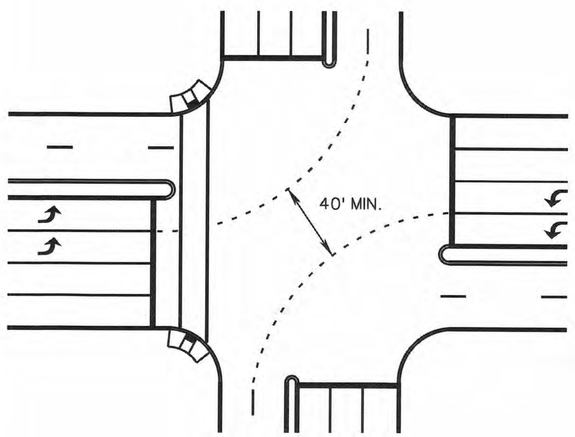

DETAIL FOR DOTTED EXTENSION THROUGH INTERSECTION AT DUAL TURN LANES

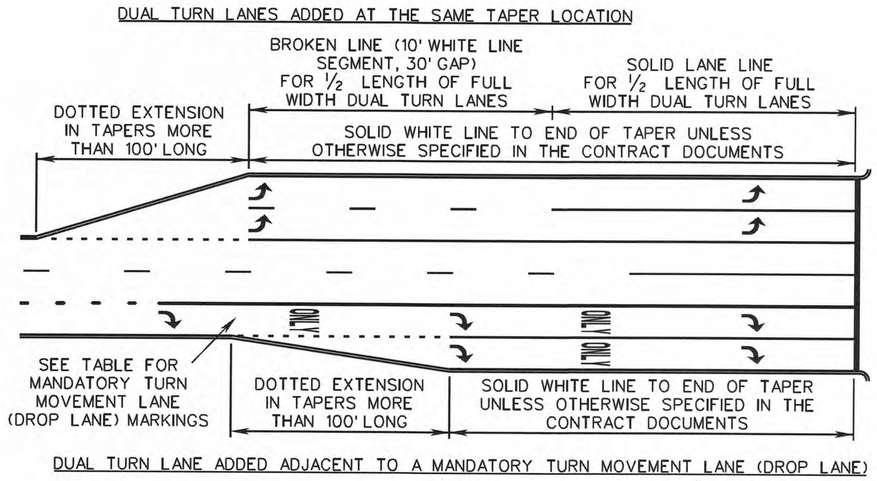

DETAIL FOR LANE LINE MARKINGS AT DUAL TURN LANES

SPECIFICATION REFERENCE	A COPY OF THE ORIGINAL SEALED AND SIGNED DRAWING IS ON FILE IN THE CENTRAL OFFICE.	VDOT ROAD AND BRIDGE STANDARDS	
704	TYPICAL PAVEMENT MARKING INTERSECTION DETAILS VIRGINIA DEPARTMENT OF TRANSPORTATION	REVISION DATE NEW 01/15	SHEET 3 OF 4 1330.32

COMMONWEALTH OF VIRGINIA
JEFFREY PHILLIP HOCHANADEL
Lic. No. 052202
02/05/16
PROFESSIONAL ENGINEER

THIS DRAWING PREPARED AT THE Corporate Headquarters
1001 Boulders Parkway | Richmond, VA 23225
TEL 804.200.6500 fax 804.560.1016 www.timmons.com

YOUR VISION ACHIEVED THROUGH OURS.

Site Development | Residential | Infrastructure | Technology

REVISION DESCRIPTION

DATE

DATE 02/05/16
DRAWN BY GTS
DESIGNED BY GTS
CHECKED BY JPH
SCALE N/A

TIMMONS GROUP

EVONIK INDUSTRIES
RICHMOND DISTRICT - CITY OF HOPEWELL, VIRGINIA
INTERIM STANDARD SHEET

JOB NO. 37371
SHEET NO. TS(1A)12

These plans and associated documents are the exclusive property of TIMMONS GROUP and may not be reproduced in whole or in part and shall not be used for any purpose whatsoever, inclusive, but not limited to construction, bidding, and/or construction staking without the express written consent of TIMMONS GROUP.

Vented Rodent Barrier

Notes:

1) Wire Mesh Ring
   1/8" Woven Hardware Cloth
   27 Gauge (Commerical Grade)
   Hot dipped galvanized
   Doubled Lapped
   Length & Height determined by field measurements
   Secured with Wire Twist Ties

2) Wire mesh ring shall be placed inside the bolt circle before pole is erected and plumbed.

3) Wire mesh ring shall be compressed between pole base plate, concrete foundation and bolt circle. Take all necessary steps to assure the wire mesh ring will remain in place and any access through the pole base plate opening is eliminated.

4) Welding or drilling is not permitted on base plate of pole.

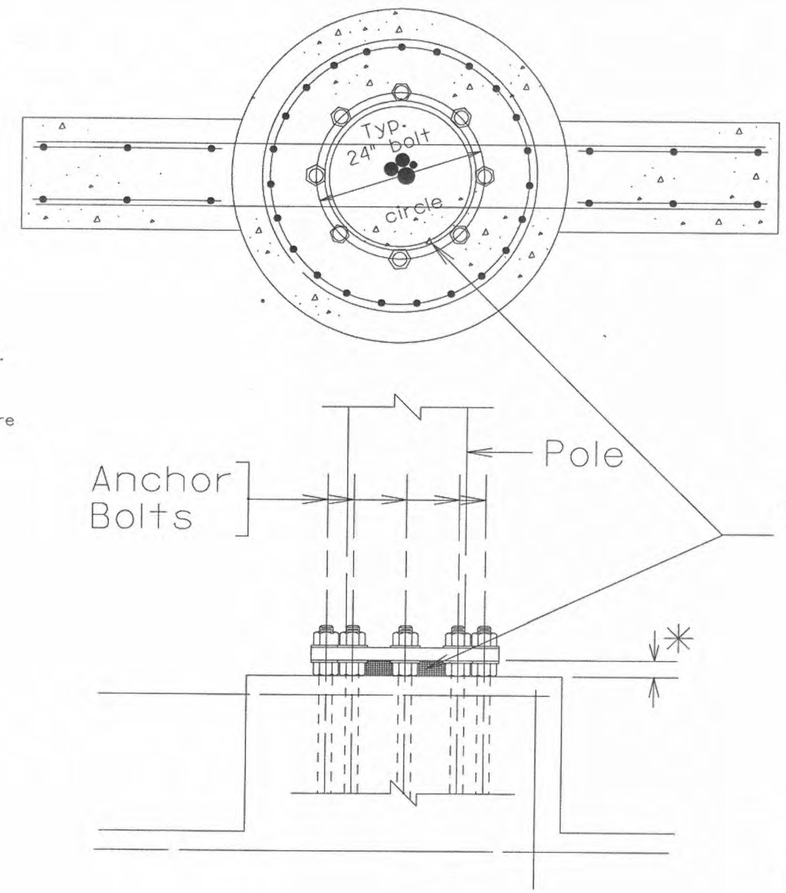

DETAIL "A"

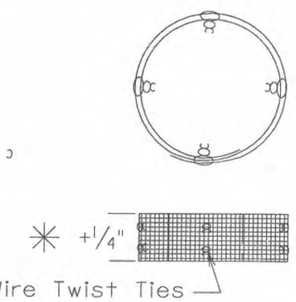

SCALE: NONE

Vented Rodent Barrier

...\Spec\CADD\special\RATBAR~1.DGN 04/08/2004 09:52:45 AM

COMMONWEALTH OF VIRGINIA
JEFFREY PHILLIP HOCHANADEL
Lic. No. 052202
02/05/16
PROFESSIONAL ENGINEER

THIS DRAWING PREPARED AT THE
Corporate Headquarters
1001 Boulders Parkway | Richmond, VA 23225
TEL 804.200.6500 fax 804.560.1016 www.timmons.com

YOUR VISION ACHIEVED THROUGH OURS.

Site Development | Residential | Infrastructure | Technology

DATE	REVISION DESCRIPTION

DATE	02/05/16
DRAWN BY	GTS
DESIGNED BY	GTS
CHECKED BY	JPH
SCALE	N/A

TIMMONS GROUP

EVONIK INDUSTRIES
RICHMOND DISTRICT - CITY OF HOPEWELL, VIRGINIA
INTERIM STANDARD SHEET

JOB NO. 37371

SHEET NO. TS(1A)13

These plans and associated documents are the exclusive property of TIMMONS GROUP and may not be reproduced in whole or in part and shall not be used for any purpose whatsoever, inclusive, but not limited to construction, bidding, and/or construction staking without the express written consent of TIMMONS GROUP.

SUMMARY OF QUANTITIES

Inf. No.	Intersection	TCD Discipline	Sign Panel	Elec.Svc.Grounding Electrode (10')	Electrical Service SE-5	Traf.Signal Head Sec.12" L.E.D.	Conc.Found.Signal Pole PF-8	Concrete Foundation CF-4	Signal Pole Mast Arm Pole, Ty. I	Signal Pole Mast Arm Pole, Ty. II	Mast Arm 50'	Mast Arm 60'	Mast Arm 65'	Detector Video Detection (2 Inputs)	Detector Camera	8/3 Conductor Cable	14/7 Conductor Cable	16/3 Conductor Cable	Conductor Cable Coaxial	Hanger Assembly SM-3,One Way	Traffic Signalization - Controller & Cabinet - Spec.703 & ATTD	Traffic Signalization - External 8 Battery Pack - Spec.ATTD	Traffic Signalization - Uninterruptable Power Supply - Spec.ATTD	Traffic Signalization - Integral Generator Connection - Spec.ATTD	Ty. B Cl. I Pave. Line Mark. 4"	Ty. B Cl. I Pave. Line Mark. 24"	Eradication of Exist. Pavement Marking	Pave. Mess. Mark. Elong. Arrow	Junction Box JB-S2	Junction Box JB-S3	Bored Conduit (3")	2" PVC Conduit	3" PVC Conduit	Trench Excavation ECI-1	Test Bore	Maintenance of Traffic
		Summary Notes																																		
		ITEM NO.	50108	51160	51170	51184	51238	51248	51425	51425	51426	51426	51426	51541	51541	55080	51607	51614	51614	51840	52002	52002	52002	52002	54032	54042	54106	54300	55587	55588	56051	56053	56054	56200	56205	24265
		UNIT	SF	EA	EA	EA	C.Y.	C.Y.	EA	EA	EA	EA	EA	EA	EA	L.F.	L.F.	L.F.	L.F.	EA	EA	EA	EA	EA	LF	LF	SF	EA	EA	EA	L.F.	L.F.	L.F.	L.F.	EA	LS
		SHEET NO.																																		
1	Route 10 & Hummel Ross Road	TS(3)	86	4	1	32	27	5	2	1	1	2	1	2	4	650	1500	900	900	10	1	1	1	1	600	185	80	1	4	1	500	100	175	275	3	1
		TOTAL	86	4	1	32	27	5	2	1	1	2	1	2	4	650	1500	900	900	10	1	1	1	1	600	185	80	1	4	1	500	100	175	275	3	1

NOTE:

THE TRAFFIC SIGNAL INSTALLATION WILL BE PERFORMED AS A LUMP SUM BID ITEM. THE QUANTITIES SHOWN ABOVE ARE FOR ESTIMATING PURPOSES ONLY AND THE CONTRACTOR IS RESPONSIBLE FOR PERFORMING THEIR OWN REVIEW OF THE ESTIMATED QUANTITIES.

REFERENCES
(PLAN AND DETAIL SHEETS)

Traffic Signal Sheet	TS(3)
Pavement Marking Plan Sheet	TS(3B)

TRAFFIC CONTROL DEVICE PLANS

TRAFFIC SIGNAL PLAN

RTE. 10 (RANDOLPH ROAD) & HUMMEL ROSS ROAD

CITY OF HOPEWELL, VIRGINIA

COMMONWEALTH OF VIRGINIA
JEFFREY PHILLIP HOZHANADEL
Lic. No. 052202
02/05/16
PROFESSIONAL ENGINEER

THIS DRAWING PREPARED AT THE
Corporate Headquarters
1001 Boulders Parkway, Richmond, VA 23225
TEL 804.200.6500 fax 804.560.1016 www.timmons.com

YOUR VISION ACHIEVED THROUGH OURS.

Site Development | Residential | Infrastructure | Technology

REVISION DESCRIPTION

DATE

DATE 02/05/16
DRAWN BY GTS
DESIGNED BY GTS
CHECKED BY JPH
SCALE N/A

TIMMONS GROUP

EVONIK INDUSTRIES
RICHMOND DISTRICT - CITY OF HOPEWELL, VIRGINIA

SUMMARY OF QUANTITIES

JOB NO. 37371

SHEET NO. TS(2)

These plans and associated documents are the exclusive property of TIMMONS GROUP and may not be reproduced in whole or in part and shall not be used for any purpose whatsoever, including, but not limited to construction, bidding, and/or construction staking without the express written consent of TIMMONS GROUP.

S-2

QUANTITY: 2

SIGN DETAIL

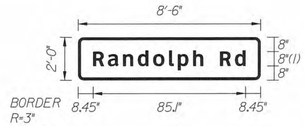

FONT:
(I) ClearviewHwy-5-W

Panel Style: D3-V1 - 102 x 24.ssi
M.U.T.C.D.: 2009 Edition

Panel Style: D3-V1 – 102 x 24.ssi
Dimensions are in inches.tenths

Letter locations are panel edge to lower left corner

SIGN NUMBER	S-2
WIDTH x HGHT.	8'-6" x 2'-0"
BORDER WIDTH	1.5"
CORNER RADIUS	3"
MOUNTING	Overhead
BACKGROUND	TYPE: Reflective
	COLOR: Green
LEGEND/BORDER	TYPE: Reflective
	COLOR: White/White

SYMBOL	ROT	X	Y	WID	HT

LETTER POSITIONS (X)

R	a	n	d	o	l	p	h		R	d	LENGTH	SERIES/SIZE
8.4	16.7	25.2	33.4	42	50.9	55.8	64.3	69.9	79.4	87.8	85.1	Clearview-Hwy-5-W 8/6

S-3

QUANTITY: 1

SIGN DETAIL

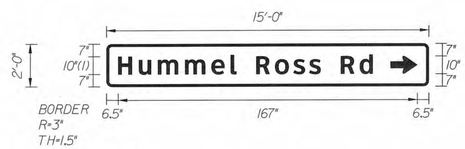

FONT:
(I) ClearviewHwy-5-W

Panel Style: D3-V1 - 180 x 24.ssi
M.U.T.C.D.: 2009 Edition

Panel Style: D3-V1 – 180 x 24.ssi
Dimensions are in inches.tenths

Letter locations are panel edge to lower left corner

SIGN NUMBER	S-3
WIDTH x HGHT.	15'-0" x 2'-0"
BORDER WIDTH	1.5"
CORNER RADIUS	3"
MOUNTING	Overhead
BACKGROUND	TYPE: Reflective
	COLOR: Green
LEGEND/BORDER	TYPE: Reflective
	COLOR: White/White

SYMBOL	ROT	X	Y	WID	HT
AR_Type D	270	158.6	7	10	15

LETTER POSITIONS (X)

H	u	m	m	e	l		R	o	s	s		R	d	LENGTH	SERIES/SIZE
6.5	18.1	28.7	43.8	58.6	69.3	72.5	83.6	94.1	104.4	113.2	119.6	130.9	141.4	142.1	Clearview-Hwy-5-W 108

S-4

QUANTITY: 1

SIGN DETAIL

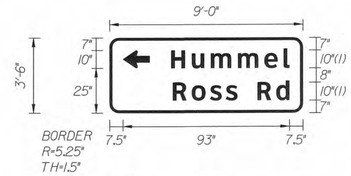

FONT:
(I) ClearviewHwy-5-W

Panel Style: D3-V1a - 108 x 42.ssi
M.U.T.C.D.: 2009 Edition

Panel Style: D3-V1a – 108 x 42.ssi
Dimensions are in inches.tenths

Letter locations are panel edge to lower left corner

SIGN NUMBER	S-4
WIDTH x HGHT.	9'-0" x 3'-6"
BORDER WIDTH	1.5"
CORNER RADIUS	5.25"
MOUNTING	Overhead
BACKGROUND	TYPE: Reflective
	COLOR: Green
LEGEND/BORDER	TYPE: Reflective
	COLOR: White/White

SYMBOL	ROT	X	Y	WID	HT
AR_Type D	90	7.5	25	10	15

LETTER POSITIONS (X)

H	u	m	m	e	l															LENGTH	SERIES/SIZE
34.5	46.1	56.7	71.8	86.6	97.3															66	Clearview-Hwy-5-W 108
R	o	s	s		R	d															
35.5	46	56.3	65.1	71.5	82.8	93.3														65	Clearview-Hwy-5-W 108

REFERENCES (PLAN AND DETAIL SHEETS)	
Signal Plan	TS(3)
Pavement Marking Plan Sheet	TS(3B)

TRAFFIC CONTROL DEVICE PLANS

TRAFFIC SIGNAL PLAN

RTE. 10 (RANDOLPH ROAD) & HUMMEL ROSS ROAD

CITY OF HOPEWELL, VIRGINIA

COMMONWEALTH OF VIRGINIA
JEFFREY PHILLIP HOCHANADEL
Lic. No. 052202
02/05/16
PROFESSIONAL ENGINEER

THIS DRAWING PREPARED AT THE
Corporate Headquarters
1001 Boulders Parkway, Richmond, VA 23225
TEL 804.200.6500 fax 804.560.1016 www.timmons.com

YOUR VISION ACHIEVED THROUGH OURS.

Site Development | Residential | Infrastructure | Technology

REVISION DESCRIPTION

DATE

DATE	02/05/16
DRAWN BY	TBR
DESIGNED BY	TBR
CHECKED BY	JPH
SCALE	N/A

TIMMONS GROUP

EVONIK INDUSTRIES

RICHMOND DISTRICT - CITY OF HOPEWELL, VIRGINIA

SIGN DETAIL SHEET

JOB NO. 37371

SHEET NO. TS(2A)

These plans and associated documents are the exclusive property of TIMMONS GROUP and may not be reproduced in whole or in part and shall not be used for any purpose whatsoever, inclusive, but not limited to construction, bidding, and/or construction staking without the express written consent of TIMMONS GROUP.

TRAFFIC MAINTENANCE PLAN

GENERAL

1. THIS PROJECT IS CLASSIFIED AS TYPE A.
2. THE PROJECT WILL TAKE PLACE ENTIRELY AT THE INTERSECTION OF ROUTE 10 (RANDOLPH ROAD) AND HUMMEL ROSS ROAD.
3. THE PURPOSE OF THIS PROJECT IS TO IMPROVE THE INTERSECTION OPERATIONS OF THE INTERSECTION. CONSTRUCTION CONSISTS OF INSTALLING ALL EQUIPMENT RELATED TO AN ACTUATED TRAFFIC SIGNAL.
4. TRAFFIC ALONG THESE ROADS CONSISTS OF COMMUTERS, LOCAL RESIDENTS, AND TRUCKS.
5. THE EXISTING SPEED LIMIT FOR ROUTE 10 IS 45 MPH. THE EXISTING SPEED LIMIT FOR HUMMEL ROSS ROAD IS 25 MPH ALL EXISTING SPEED LIMITS WILL BE MAINTAINED DURING ALL PHASES OF CONSTRUCTION.

TEMPORARY TRAFFIC CONTROL (TTC)/ MAINTENANCE OF TRAFFIC (MOT):

6. THE MAJOR CONSTRUCTION STAGE WILL TAKE PLACE ENTIRELY AT THE INTERSECTION OF ROUTE 10 (RANDOLPH ROAD) AND HUMMEL ROSS ROAD.
7. LANE CLOSURES AND SHOULDER CLOSURES ARE ANTICIPATED FOR THIS PROJECT AND WILL BE IN ACCORDANCE WITH THE VIRGINIA WORK AREA PROTECTION MANUAL, 2011 EDITION (REVISION 1). THE FOLLOWING TEMPORARY TRAFFIC MEASURES SHALL BE USED:
   - 7.1. TYPICAL TRAFFIC CONTROL, STATIONARY OPERATION ON A SHOULDER (FIGURE TTC-4.1)
   - 7.2. TYPICAL TRAFFIC CONTROL, SHOULDER OPERATION WITH MINOR ENCROACHMENT (FIGURE TTC-5.1)
   - 7.3. TYPICAL TRAFFIC CONTROL, OUTSIDE LANE CLOSURE OPERATION ON A FOUR-LANE ROADWAY (FIGURE TTC-16.1)
   - 7.4. TYPICAL TRAFFIC CONTROL, INSIDE LANE CLOSURE OPERATION ON A FOUR-LANE ROADWAY (FIGURE TTC-17.1)
9. NEGATIVE IMPACTS TO THE TRAVELING PUBLIC SHALL BE MINIMIZED IN EVERY WAY POSSIBLE. AS SUCH, DURING PEAK TIMES AND HOLIDAYS, ALL LANES OF TRAFFIC SHALL BE MAINTAINED IN BOTH DIRECTIONS. SEE THE "GENERAL NOTES" PORTION OF THIS PLAN SHEET FOR MORE INFORMATION.
10. ACCESS TO ALL ADJACENT PROPERTIES SHALL BE MAINTAINED AT ALL TIMES.

PUBLIC COMMUNICATION PLAN:

11. IF ANY MAJOR TRAFFIC CHANGES ARE TO TAKE PLACE (LANE CLOSURES, ETC.), THE PROJECT ADMINISTRATOR SHALL ENSURE THAT THE LOCAL NEWSPAPERS AND RADIO STATIONS ARE INFORMED 72 HOURS IN ADVANCE OF THE CHANGE.
12. PORTABLE CHANGEABLE MESSAGE BOARDS (PCMBs) SHALL BE USED TO NOTIFY THE TRAVELING PUBLIC OF ANY SUCH MAJOR TRAFFIC CHANGES 72 HOURS IN ADVANCE OF THE CHANGE.

TRANSPORTATION OPERATION PLAN:

13. THE PROJECT PERSONNEL SHALL NOTIFY THE "REGIONAL TRANSPORTATION OPERATIONS CENTER" (RTOC) WHEN A LANE CLOSURE IS IMPLEMENTED, AND AGAIN WHEN IT IS REMOVED. THE RTOC WILL IN TURN PLACE THE INFORMATION INTO THE "511 VIRGINIA" TRAFFIC ALERT SYSTEM (A SERVICE OF THE VIRGINIA DEPARTMENT OF TRANSPORTATION TRAFFIC SYSTEM).
14. THE FOLLOWING IS A LIST OF LOCAL EMERGENCY NUMBERS:

    FIRE: 804-748-1360
    CITY OF HOPEWELL POLICE: 804-541-2275
    STATE POLICE: 804-379-8645
    ENGINEER CONTACT: CHRIS KIEFER, TIMMONS GROUP: 804-200-6425
    CENTRAL REGION OPERATION WORK ZONE COORDINATOR: 804-524-6324
    DISTRICT PUBLIC AFFAIRS MANAGER: 804-524-6179
    DISTRICT PRELIMINARY ENGINEERS PROJECT MANAGER: 804-524-6154
    CITY OF HOPEWELL PUBLIC WORKS: 804-541-2275

15. ANY TRAFFIC INCIDENT THAT OCCURS DURING THE LIFE OF THIS PROJECT WILL BE DISCUSSED BY THE CONTRACTOR, AND THE CITY OF HOPEWELL ENGINEER TO DETERMINE WHETHER ANY CHANGES NEED TO BE MADE TO THE TRAFFIC CONTROL ON THE PROJECT.

GENERAL NOTES

1. ANY REQUIRED LANE CLOSURES MUST BE APPROVED IN ADVANCE BY THE CITY OF HOPEWELL ENGINEER.
2. LANE CLOSURES AND STOPPING OF TRAFFIC SHALL ONLY BE ALLOWED ON ROUTE 10 & HUMMEL ROSS ROAD BETWEEN THE HOURS OF 9:00 AM TO 3:00 PM AND 9:00 PM TO 6:00 AM.
3. TRAFFIC SHALL NOT BE STOPPED ON ROUTE 10 OR HUMMEL ROSS ROAD AT ANY TIME UNLESS OTHERWISE DIRECTED BY CITY OF HOPEWELL ENGINEER.
4. ALL AREAS EXCAVATED DEEPER THAN 2" BELOW EXISTING PAVEMENT SURFACE AND WITHIN THE CLEAR ZONE, AT THE CONCLUSION OF EACH WORKDAY, SHALL BE BACK FILLED TO FORM AN APPROXIMATE 6:1 WEDGE AGAINST THE PAVEMENT SURFACE FOR THE SAFETY AND PROTECTION OF VEHICULAR TRAFFIC. ALL COST PLACING, MAINTAINING, AND REMOVING THE 6:1 WEDGE SHALL BE INCLUDED IN THE PRICE BID FOR OTHER ITEMS IN THE CONTRACT AND NO ADDITIONAL COMPENSATION WILL BE ALLOWED.
5. LANE CLOSURES WILL NOT BE PERMITTED ON HOLIDAYS OR WEEKENDS UNLESS OTHERWISE APPROVED IN ADVANCE BY THE CITY OF HOPEWELL ENGINEER.
6. ANY CONTRACT ITEM(S) NOT SPECIFICALLY NOTED IN THE MAINTENANCE OF TRAFFIC MAY BE SCHEDULED FOR CONSTRUCTION AT THE CONTRACTOR'S OPTION, AS APPROVED BY THE CITY OF HOPEWELL ENGINEER.
7. ACCESS TO ALL ADJACENT PROPERTIES AND CONNECTING STREETS SHALL BE MAINTAINED AT ALL TIMES DURING CONSTRUCTION.
8. ALL TRAFFIC CONTROL SHALL BE SET UP AND SPACED ACCORDING TO THE VIRGINIA WORK AREA PROTECTION MANUAL, 2011 EDITION, (APRIL 1, 2015 REVISION).
9. THE CONTRACTOR SHALL PROVIDE ADDITIONAL TRAFFIC CONTROL AS DIRECTED BY THE CITY OF HOPEWELL, SHOULD FIELD CONDITIONS WARRANT.
10. THE CONTRACTOR MAY REDUCE LANE WIDTHS TO 11' DURING CONSTRUCTION. ANY TEMPORARY PAVEMENT MARKINGS THAT ARE REQUIRED ARE THE RESPONSIBILITY OF THE CONTRACTOR.
11. THE CONTRACTOR IS RESPONSIBLE FOR PLACEMENT AND MAINTENANCE OF ALL TEMPORARY PAVEMENT MARKINGS THAT ARE REQUIRED OR IMPLIED IN THE CONSTRUCTION SEQUENCING. THE CONTRACTOR IS RESPONSIBLE FOR PROVIDING ALL TRAFFIC CONTROL DEVICES, SIGNAGE, EQUIPMENT, PERSONNEL, INCLUDING CERTIFIED TRAFFIC-CONTROL PERSONNEL, ETC. TO CONTROL TRAFFIC DURING CONSTRUCTION WITHIN VDOT MAINTAINED RIGHT-OF-WAY. ALL TRAFFIC CONTROL SHALL BE IN STRICT ACCORDANCE WITH THE STANDARDS, GUIDELINES, POLICIES, AND OBJECTIVES OF THE LATEST EDITION OF THE VIRGINIA WORK AREA PROTECTION MANUAL, MANUAL FOR UNIFORM TRAFFIC CONTROL DEVICES (MUTCD), AND ALL CITY PERMITS.
12. THE CONTRACTOR SHALL NOT REMOVE EXISTING PAVEMENT MARKINGS OR REDUCE LANE WIDTHS UNTIL THE PAVEMENT RESURFACING/WIDENING AND PERMANENT PAVEMENT MARKINGS CAN BE ACCOMPLISHED WITHIN 24 HOURS. IF PAVEMENT MARKINGS WILL NOT BE REPLACED WITHIN 24 HOURS, THE CONTRACTOR SHALL PLACE TEMPORARY CONSTRUCTION PAVEMENT MARKING, TYPE F, UNTIL PERMANENT MARKINGS ARE IN PLACE.
13. THE COST ASSOCIATED WITH PERFORMING NIGHT TIME OPERATIONS, INCLUDING BUT NOT LIMITED TO, LIGHTING AND MAINTAINING TRAFFIC, SHALL BE INCLUDED IN THE PRICE BID FOR MAINTENANCE OF TRAFFIC
14. THE CONTRACTOR IS RESPONSIBLE FOR ANY DAMAGE TO OVERHEAD UTILITIES. THE CONTRACTOR MUST INSURE EQUIPMENT SHALL NOT DAMAGE ANY OVERHEAD UTILITIES PRIOR, DURING, AND AFTER CONSTRUCTION.

REFERENCES (PLAN AND DETAIL SHEETS)	
Traffic Signal Plan Sheet	TS(3)

TRAFFIC CONTROL DEVICE PLANS

TRAFFIC SIGNAL PLAN

RTE. 10 (RANDOLPH ROAD) & HUMMEL ROSS ROAD

CITY OF HOPEWELL, VIRGINIA

COMMONWEALTH OF VIRGINIA
JEFFREY PHILLIP HOCHANADEL
Lic. No. 052202
02/05/16
PROFESSIONAL ENGINEER

THIS DRAWING PREPARED AT THE CORPORATE HEADQUARTERS, VA 23225
1001 Boulders Parkway, Richmond, VA 23225
TEL 804.200.6500 fax 804.560.1016 www.timmons.com

YOUR VISION ACHIEVED THROUGH OURS.

Site Development | Residential | Infrastructure | Technology

DATE	REVISION DESCRIPTION

DATE 02/05/16
DRAWN BY GTS
DESIGNED BY GTS
CHECKED BY JPH
SCALE N/A

TIMMONS GROUP

EVONIK INDUSTRIES
RICHMOND DISTRICT - CITY OF HOPEWELL, VIRGINIA
TRAFFIC MAINTENANCE PLAN

JOB NO. 37371
SHEET NO. TS(2B)

These plans and associated documents are the exclusive property of TIMMONS GROUP and may not be reproduced in whole or in part and shall not be used for any purpose whatsoever, inclusive, but not limited to construction, bidding, and/or construction staking without the express written consent of TIMMONS GROUP.

Signal Pole & Controller Legend

(ALL DIMENSIONS ARE TO CENTER OF POLE)

(1) CONTROLLER CABINET AND FOUNDATION (CF-4)

(A) MAST ARM POLE (MP-1), TYPE I
65' Arm Parrallel to Randolph Road
Signal Placement: 46', 59'
Sign Placement: 17'
Video Camera: 53'

(B) MAST ARM POLE (MP-1), TYPE II
60' Arm Parallel to Randolph Road
Signal Placement: 41.5', 53.5'
Sign Placement: 18'
Video Camera: 47.5'
60' Arm Perpendicular to Randolph Road
Signal Placement: 26', 38', 50'
Sign Placement: 12'
Video Camera: 32.5'

(C) MAST ARM POLE (MP-1), TYPE I
50' Arm Perpendicular to Randolph Road
Signal Placement: 19.5', 31.5', 43.5'
Sign Placement: 3.5', 12'
Video Camera: 26'

(D) SE-5 Electrical Service

Signal Pole Legend Notes:

1) All Signal Head & Sign Locations are Approximate. The contractor shall adjust the Location of Signal Heads & Signs as directed by the Engineer.

Phasing Diagram

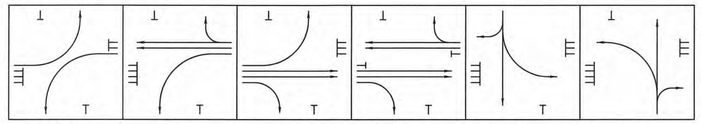

Color Sequence Chart

	SIGNAL	PHASES 1-5	1-6	2-5	2-6	3	4	FLASH
SIGNALS	1	-G	-G					
	2			G	G			Y
	3					G		
	3A					G / -G		
	4						G	
	4A						G / -G	
	5	-G		-G				
	6		G		G			Y

NOTE: EMPTY BOX DENOTES RED INDICATION.

Proposed Signals

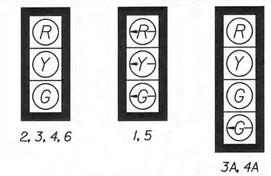

Proposed Signs

S-1

R3-5(R)
(30"x36")
QUANTITY - 1 EA.

S-2

Randolph Rd

D3-V1
(102" x 24")
QUANTITY - 2 EA.

S-3

Hummel Ross Rd →

D3-V1
(180" x 24")
QUANTITY - 1 EA.

S-4

← Hummel Ross Rd

D3-V1a
(108" x 42")
QUANTITY - 1 EA.

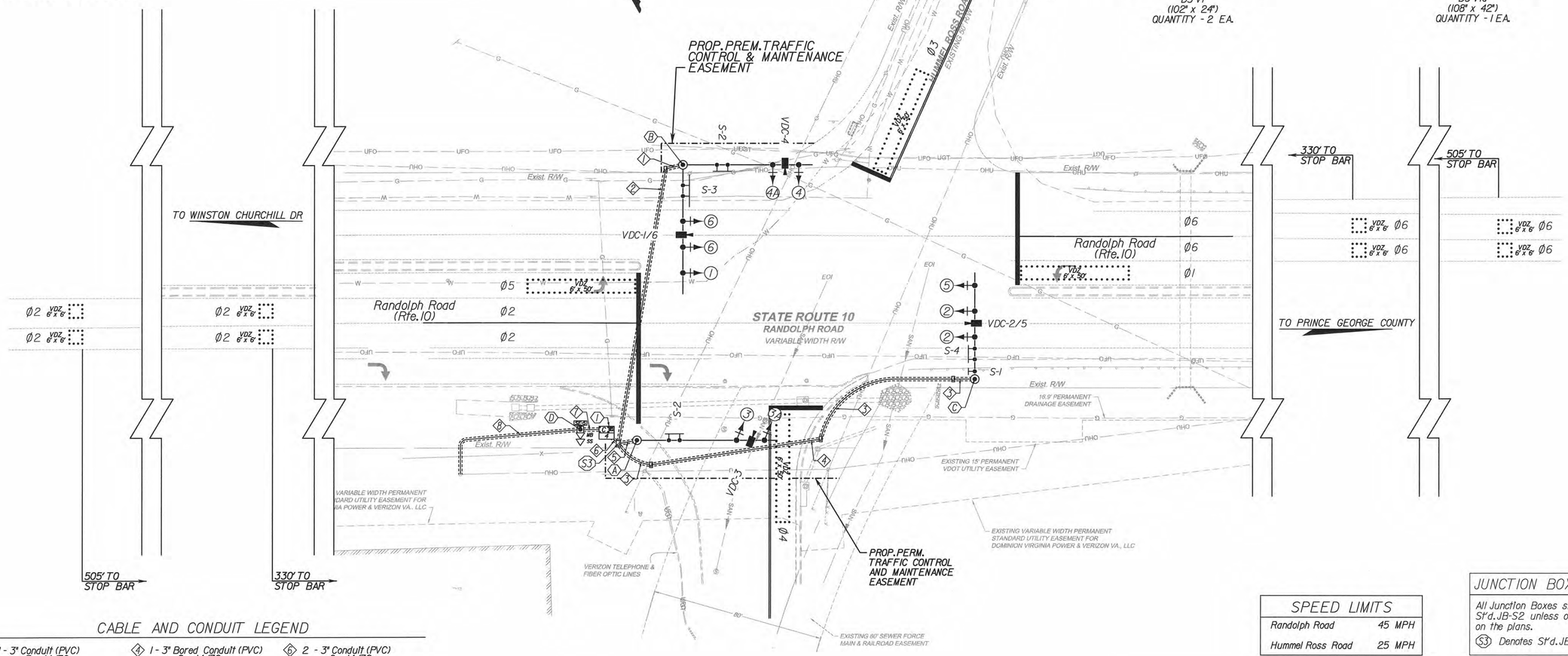

CABLE AND CONDUIT LEGEND

(1) 1 - 3" Conduit (PVC)
3 - 14/7C
2 - 16/3C
2 - VDC
1 - EGC

(2) 1 - 3" Bored Conduit (PVC)
3 - 14/7C
2 - 16/3C
2 - VDC
1 - EGC
1 - 3" Conduit (spare)

(3) 1 - 3" Conduit (PVC)
2 - 14/7C
1 - 16/3C
1 - VDC
1 - EGC

(4) 1 - 3" Bored Conduit (PVC)
2 - 14/7C
1 - 16/3C
1 - VDC
1 - EGC
1 - 3" Conduit (spare)
1 - EGC

(5) 1 - 3" Conduit (PVC)
1 - 14/2C
1 - 16/3C
1 - VDC
1 - EGC

(6) 2 - 3" Conduit (PVC)
6 - 14/7C
4 - 16/3C
4 - VDC
1 - EGC (per conduit)

(7) 1 - 2" Conduit (PVC)
With Pull Wire
1 - EGC

(8) 1 - 2" Conduit (PVC) (w/ 24" Min. Cover)
With Pull Wire. Stub and Cap Conduit
24" Above Grade at Base of Dominion
VA Power Pole

EGC Denotes "Equipment Grounding Conductor"

SCALE
0 25' 50'

SPEED LIMITS

Randolph Road	45 MPH
Hummel Ross Road	25 MPH

JUNCTION BOX LEGEND

All Junction Boxes shall conform to St'd. JB-S2 unless otherwise noted on the plans.

(S3) Denotes St'd. JB-S3

REFERENCES
(PLAN AND DETAIL SHEETS)

Sign Figure Details	TS(2A)
Signal Pole Location Sheet	TS(3A)
Pavement Marking Plan Sheet	TS(3B)

TRAFFIC CONTROL DEVICE PLANS

TRAFFIC SIGNAL PLAN

RTE. 10 (RANDOLPH ROAD) & HUMMEL ROSS ROAD

CITY OF HOPEWELL, VIRGINIA

COMMONWEALTH OF VIRGINIA
JEFFREY PHILLIP HOOHANADEL
Lic. No. 052202
02/05/16
PROFESSIONAL ENGINEER

THIS DRAWING PREPARED AT THE Corporate Headquarters
1001 Boulders Parkway | Richmond, VA 23225
TEL 804.200.6500 fax 804.560.1016 www.timmons.com

YOUR VISION ACHIEVED THROUGH OURS.

Site Development | Residential | Infrastructure | Technology

REVISION DESCRIPTION	DATE

DATE	02/05/16
DRAWN BY	GTS
DESIGNED BY	GTS
CHECKED BY	JPH
SCALE	1" =25'

TIMMONS GROUP

EVONIK INDUSTRIES
RICHMOND DISTRICT - CITY OF HOPEWELL, VIRGINIA
TRAFFIC SIGNAL PLAN SHEET

JOB NO. 37371

SHEET NO. TS(3)

These plans and associated documents are the exclusive property of TIMMONS GROUP and may not be reproduced in whole or in part and shall not be used for any purpose whatsoever, inclusive, but not limited to construction, bidding, and/or construction staking without the express written consent of TIMMONS GROUP.

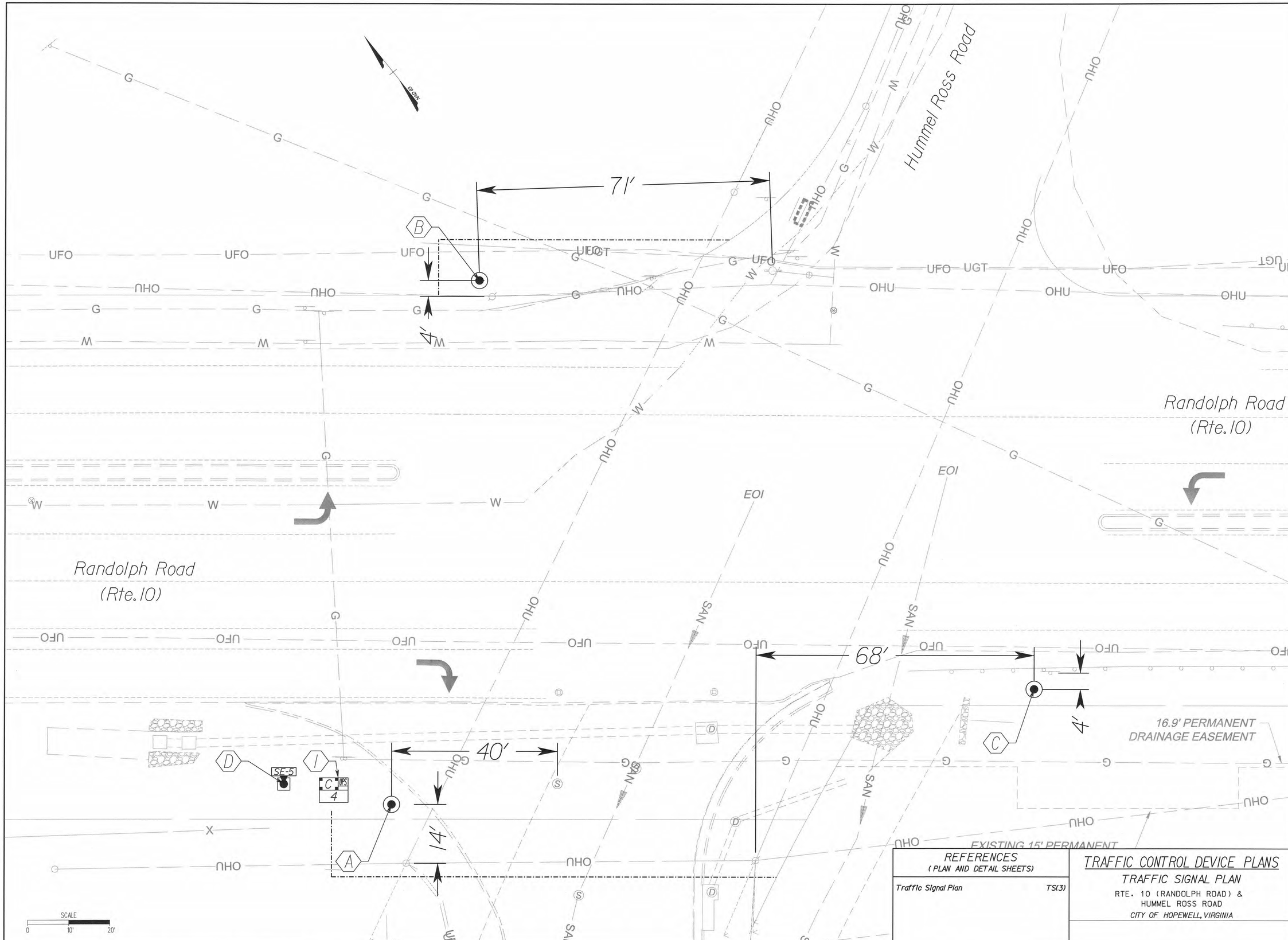

REFERENCES (PLAN AND DETAIL SHEETS)	
Traffic Signal Plan	TS(3)

TRAFFIC CONTROL DEVICE PLANS

TRAFFIC SIGNAL PLAN

RTE. 10 (RANDOLPH ROAD) & HUMMEL ROSS ROAD

CITY OF HOPEWELL, VIRGINIA

COMMONWEALTH OF VIRGINIA
JEFFREY PHILLIP ROCHANADEL
Lic. No. 052202
02/05/16
PROFESSIONAL ENGINEER

THIS DRAWING PREPARED AT THE
Corporate Headquarters
1001 Boulders Parkway | Richmond, VA 23225
TEL 804.200.6500 fax 804.560.1016 www.timmons.com

YOUR VISION ACHIEVED THROUGH OURS.

Site Development | Residential | Infrastructure | Technology

REVISION DESCRIPTION

DATE

DATE	02/05/16
DRAWN BY	GTS
DESIGNED BY	GTS
CHECKED BY	JPH
SCALE	1" = 10'

TIMMONS GROUP

EVONIK INDUSTRIES

RICHMOND DISTRICT - CITY OF HOPEWELL, VIRGINIA

TRAFFIC SIGNAL POLE LOCATION SHEET

JOB NO.	37371
SHEET NO.	TS(3A)

These plans and associated documents are the exclusive property of TIMMONS GROUP and may not be reproduced in whole or in part and shall not be used for any purpose whatsoever, inclusive, but not limited to construction, bidding, and/or construction staking without the express written consent of TIMMONS GROUP.

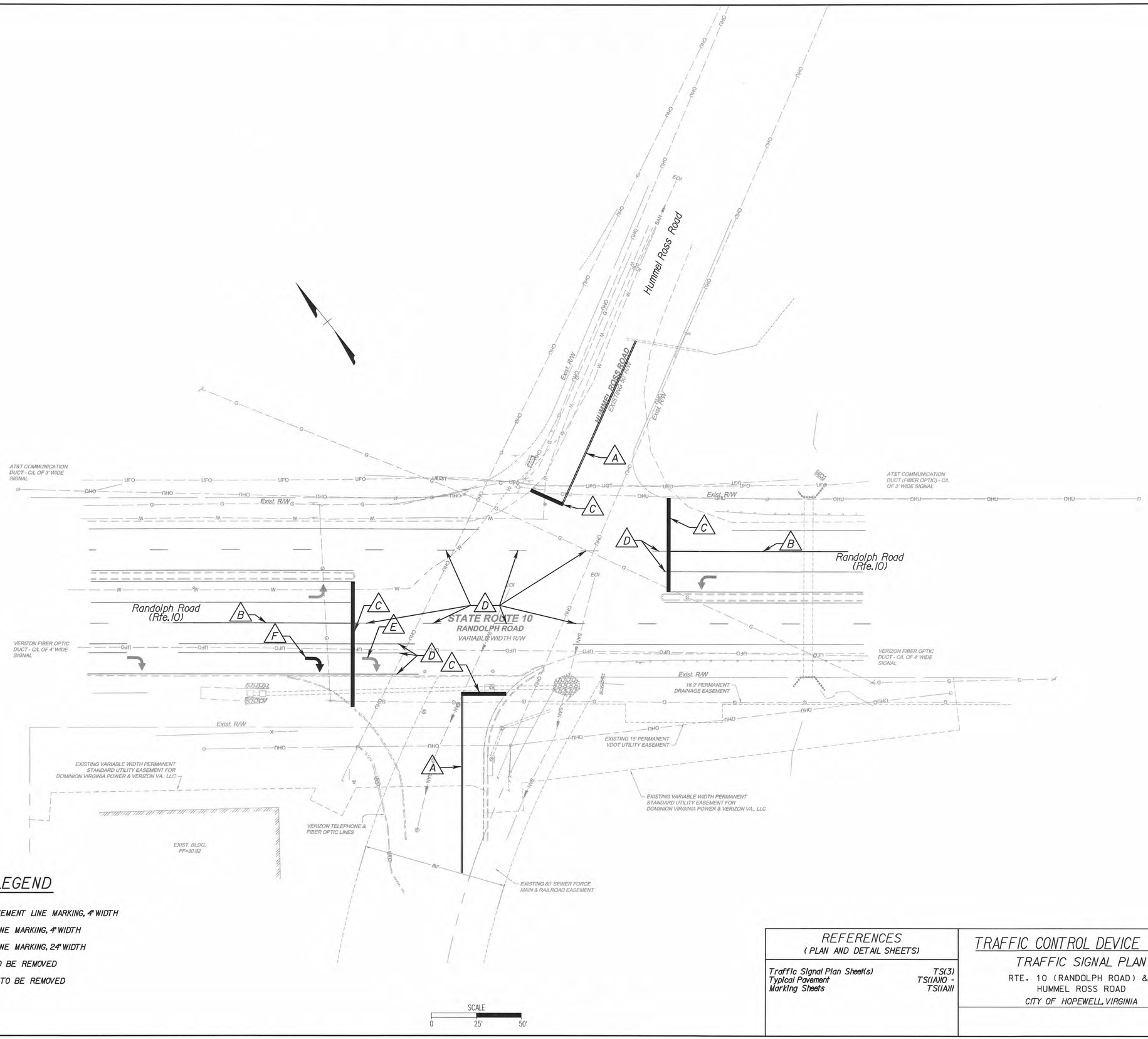

PAVEMENT MARKING LEGEND

- (A) TYPE B, CLASS I DOUBLE YELLOW PAVEMENT LINE MARKING, 4" WIDTH
- (B) TYPE B, CLASS I WHITE PAVEMENT LINE MARKING, 4" WIDTH
- (C) TYPE B, CLASS I WHITE PAVEMENT LINE MARKING, 24" WIDTH
- (D) EXISTING PAVEMENT MARKING LINE TO BE REMOVED
- (E) EXISTING PAVEMENT MARKING ARROW TO BE REMOVED
- (F) PAVEMENT MARKING ARROW

REFERENCES (PLAN AND DETAIL SHEETS)	
Traffic Signal Plan Sheet(s)	TS(3)
Typical Pavement Marking Sheets	TS(IA)10 - TS(IA)11

TRAFFIC CONTROL DEVICE PLANS

TRAFFIC SIGNAL PLAN

RTE. 10 (RANDOLPH ROAD) & HUMMEL ROSS ROAD

CITY OF HOPEWELL, VIRGINIA

COMMONWEALTH OF VIRGINIA
JEFFREY PHILLIP HOCHANADEL
Lic. No. 052202
02/05/16
PROFESSIONAL ENGINEER

THIS DRAWING PREPARED AT THE
Corporate Headquarters
1001 Boulders Parkway, Richmond, VA 23225
TEL 804.200.6500 fax 804.560.1016 www.timmons.com

YOUR VISION ACHIEVED THROUGH OURS.

Site Development | Residential | Infrastructure | Technology

DATE	REVISION DESCRIPTION

DATE	02/05/16
DRAWN BY	GTS
DESIGNED BY	GTS
CHECKED BY	JPH
SCALE	1" =25'

TIMMONS GROUP

EVONIK INDUSTRIES
RICHMOND DISTRICT - CITY OF HOPEWELL, VIRGINIA
PAVEMENT MARKING PLAN SHEET

JOB NO. 37371

SHEET NO. TS(3B)

These plans and associated documents are the exclusive property of TIMMONS GROUP and may not be reproduced in whole or in part and shall not be used for any purpose whatsoever, inclusive, but not limited to construction, bidding, and/or construction staking without the express written consent of TIMMONS GROUP.